TRUE FITNESS

APEX ELLIPTICAL

OWNER'S MANUAL AND ASSEMBLY GUIDE

IMPORTANT—PLEASE READ

All products shown are prototype. Actual product delivered may vary. Product specifications, features, and software are subject to change without notice.

For the most up-to-date version of this manual, please see our website: https://truefitness.com/services-support/user-manuals/

CONTACTING OUR SUPPORT TEAM

To contact TRUE for any of your pre or post installation questions, please call our toll-free numbers Monday - Friday during normal business hours:

- Commercial Direct Customers and Corporate Accounts | 800.868.8783
- Retail Customers and Distributors | 800.883.8783

Or email us:

- Commercial Direct Customers and Corporate Accounts | service.direct@truefitness.com
- Retail Customers and Distributors | service@truefitness.com
- Service International | int.service@truefitness.com

When contacting TRUE, please have the following information ready:

- Serial Number of Unit
- Contact Information—Full Name, Email, and Phone Number
- Address of Facility or Residence
- Detailed Description Regarding Symptom of the Unit (along with pictures or video if applicable)

NOTE: Authorized service providers, dealers, and distributors may also use TRUE's online resource | portal.truefitness.com.

CONTACTING OUR SALES TEAM

Interested in owning more TRUE products? Please contact us with any product inquires so that we may direct you to the appropriate sales representative to help answer your questions.

- Phone | 800.426.6570
- Email | sales@truefitness.com

© 2026 TRUE Fitness All Rights Reserved.

REPORTING FREIGHT CLAIMS OR PARTS DAMAGE

Unfortunately, sometimes materials can be damaged during shipment. If materials are damaged during shipment, please follow the guidelines below to determine the appropriate process for you to follow.

Severe Damage—Obvious damage to external packaging and internal product.

Please refuse the shipment and it will be returned to TRUE by the carrier. Contact TRUE product support by calling 800.883.8783 or sales support by calling 800.426.6570 Monday-Friday during normal business hours to notify us that the shipment has been refused. Once we have received the damaged shipment, a replacement shipment will be sent to you. If the shipment comes in multiple boxes, only refuse boxes with damage.

Slight Damage—Minimal damage to external packaging with unknown internal damage to product.

If the shipment has minimal damages and you are not sure if the actual product is damaged, you must sign the bill of lading as damaged when accepting the shipment. Once you have opened the box and you have determined something is indeed damaged, please gather the serial number, model number, description of damage, and photos of damage. Please make sure the photos include the damaged product as well as the damaged box the product arrived in. Contact TRUE product support (service@truefitness.com | 800.883.8783) or TRUE sales support (sales@truefitness.com | 800.426.6570) Monday-Friday during normal business hours.

Concealed Damage—No damage to external packaging but internal damage to product.

You may receive a shipment that looks intact and discover once the box has been opened that there are hidden damages. Please notify the carrier immediately. TRUE will not be able to file a claim if the carrier is not notified in a timely manner. Once you have called the carrier you will need to gather the serial number, model number, description of damage, and photos of damage. Contact TRUE product support (service@truefitness.com | 800.883.8783) or TRUE sales support (sales@truefitness.com | 800.426.6570) Monday-Friday during normal business hours.

© 2026 TRUE Fitness All Rights Reserved.

TABLE OF CONTENTS

SAFETY INSTRUCTIONS

IMPORTANT SAFETY INSTRUCTIONS—SAVE THESE INSTRUCTIONS....5
POWER REQUIREMENTS....7
SPACE REQUIREMENTS....8
SPECIFICATIONS....8
WARNING DECALS....9
COMPLIANCES....9
PROPER USE....10

ASSEMBLY INSTRUCTIONS

PREASSEMBLY CHECKLIST....11
ASSEMBLY STEPS....15

PRODUCT FEATURES

BASE OVERVIEW....36
CONSOLE OVERVIEW....38

CARE AND MAINTENANCE

INSPECTION....40
CLEANING THE EQUIPMENT....40
LEVELING THE MACHINE....41
PREVENTATIVE MAINTENANCE....42
LONG TERM STORAGE....42

ADDITIONAL INFORMATION

TROUBLESHOOTING....43
WIRING DIAGRAM SELF GENERATING POWER....45
WIRING DIAGRAM OPTIONAL POWER SUPPLY....46

WARRANTY INFORMATION

COMMERCIAL WARRANTY....51
LIMITED-USE COMMERCIAL WARRANTY....52
IN-HOME USE WARRANTY....53
WARRANTY DETAILS....54
WARRANTY REGISTRATION....55

© 2026 TRUE Fitness All Rights Reserved.

SAFETY INSTRUCTIONS

IMPORTANT SAFETY INSTRUCTIONS—SAVE THESE INSTRUCTIONS

This equipment is intended for a commercial or institutional setting. This owner's manual should be accessible to all personal trainers, faculty, and members.

- Read and understand all instructions and warnings prior to use.
- Obtain a medical exam before beginning any exercise program. If at any time during exercise you feel faint, dizzy, or experience pain, stop and consult your physician.
- Obtain proper instruction prior to use.
- This unit is intended for commercial use only. Usage class: S (Studio).
- Inspect the unit for incorrect, worn, or loose components and do not use until corrected, replaced, or tightened prior to use.
- Do not wear loose or dangling clothing while using the unit.
- Care should be used when mounting or dismounting the unit.
- Read, understand, and test the emergency stop procedures before use.
- Disconnect all power before servicing the unit.
- Do not exceed maximum user weight of 400 lbs / 181 kg.
- Keep the top side of the moving surface clean and dry.
- Keep children and animals away.
- Use caution when moving and assembling unit.
- All exercise equipment is potentially hazardous. If attention is not paid to the conditions of equipment usage, death, or serious injury could occur.

⚠**WARNING:** Heart rate monitoring systems may be inaccurate. Over-exercising may result in serious injury or death. If you feel faint, dizzy, or experience pain, stop exercising immediately.

⚠**WARNING:** To reduce the risk of burns, fire, and electric shock or injury to persons, follow these instructions:

- Health related injuries may result from incorrect or excessive use of exercise equipment.
- TRUE STRONGLY recommends seeing a physician for a complete medical exam before undertaking an exercise program, particularly if the user has a family history of high blood pressure or heart disease, is over the age of 45, smokes, has high cholesterol, is obese or has not exercised regularly in the past year. Additionally, TRUE recommends consulting a fitness professional on the correct use of this product.
- Equipment should be immediately taken out of use if it fails to work properly or when a warning is presented electronically.
- When using this exercise machine, basic precautions should always be followed.
- Use this equipment only for its intended use as described in this manual.
- Do not move the equipment by lifting the console. Do not use the console as a handlebar during a workout.
- This product can expose you to chemicals including Toluene and Acrylamide which are known to the State of California to cause Cancer and birth defects or other reproductive harm. For more information, go to www.P65Warnings.ca.gov.
- Keep equipment stable on flat ground.
- Risk of personal injury-crushing hazard when equipment is in operation. Keep feet, hands, and fingers away from moving parts.
- Replace warning labels that may be worn, damaged, or missing.
- Replace any non-working or damaged components, remove the unit from service until repair is performed.
- Do not operate the equipment while being covered with a blanket, pillow, plastic, or anything that insulates or stops airflow. Keep air openings free of lint, hair or any obstructing material.
- Any changes or modifications to this equipment could void the product warranty.
- Do not use this product in areas where aerosol spray products are being used or where oxygen is being administered. Such substances create the danger of combustion and explosion.
- Do not use this product outdoors, near water, while wet, or in areas of high humidity including extreme temperature changes.
- Close supervision is necessary when used near children under the age of 15, or disabled persons.

© 2026 TRUE Fitness All Rights Reserved.

- Wear shoes with rubber or high traction soles. Do not use shoes with heels, leather soles, cleats or spikes. Make sure no stones are embedded in the soles. Do not use this product in bare feet. Keep all loose clothing, shoelaces and towels away from moving parts.
- Use handlebars to maintain balance when mounting and dismounting the machine and for additional stability while exercising.
- Avoid the possibility of bystanders being struck or caught between moving parts by making sure that they are out of reach of the equipment while it is in motion.
- If any of the adjustment devices are left projecting, they could interfere with the user's movement.
- Do not use typing or web surfing features at excessive speeds. Always stabilize yourself when using typing or web surfing features. (Varies by console option.)
- Never place liquids of any type directly on the unit except in the accessory tray or bottle holders. Containers with lids are recommended.
- Always follow the console instructions for proper operation.
- Use correct ergonomic positioning while operating the elliptical.
- Avoid exiting elliptical while the foot skate is still in motion.
- Do not use the contact heart rate grips as a handlebar during a workout.
- Allow only one person at a time on the equipment while it's operating.
- Do not allow animals on or near the equipment while in operation.
- Do not reach into or underneath the unit, or tip it on its side during operation.
- Do not use if you have a cold or fever.
- This equipment is not intended for use by persons with reduced physical, sensory, or mental capabilities, or lack of experience and knowledge, unless they are supervised or have been given instruction concerning use of the equipment by a person responsible for their safety.
- Children shall not play with the appliance.
- Cleaning and user maintenance shall not be made by children without supervision.
- Do not use attachments not recommended by the manufacturer.
- Allow only trained personnel to service this equipment.
- It is the sole responsibility of the owner/operator to ensure regular and scheduled maintenance is performed.
- This machine is self-generated and does not require the use of an electrical outlet with the LED console. Optional touch screen or PVS consoles require 110V AC input and 9V DC 1.5 amp output for console operation only.
- The batteries within self-generated equipment contain materials that are considered hazardous to the environment. Federal law requires proper disposal of these batteries.

DANGER: To reduce the risk of electric shock, always unplug this product when not in use, before cleaning, or attempting any maintenance activity. Do not handle the plug with wet hands.

- To disconnect, turn power OFF at the ON/OFF switch if applicable, then remove plug from electrical outlet. On the machine power switch, (▭) means that the machine power is **ON** and (◎) means the machine power is **OFF**.
- Use a TRUE AC power cord.
- Position this product so the power cord plug is accessible to the user.
- Keep the power cord away from heated surfaces. Do not pull the equipment by the power cord or use the cord as a handle. Do not run the power cord along the side or under the equipment.
- If the electrical supply cord is damaged it must be replaced by the manufacturer, an authorized service agent, or a similarly qualified person to avoid a hazard.
- This product must be connected to a properly grounded electrical outlet.
- Never insert objects into any openings in this product. If an object should drop inside, turn off the power, unplug the power cord from the outlet and carefully retrieve it. If the item cannot be reached, contact TRUE product support.
- To avoid serious injury, remove and store the power cord when the machine is not in use.
- This appliance should never be left unattended when plugged in.
- Do not use any type of extension cord with this product.
- Never operate a TRUE product if it has a damaged power cord or electrical plug, or if it has been dropped, damaged, or even partially immersed in water.

NOTE: Power warnings, grounding instructions, and power requirements are only applicable when this product is being used with the optional power supply. Non-LED consoles require the optional power supply.

© 2026 TRUE Fitness All Rights Reserved.

POWER REQUIREMENTS

Read and understand all instructions before plugging any TRUE power cord into an electrical outlet.

GROUNDING INSTRUCTIONS

This product must be grounded. If the product malfunctions or breakdowns, grounding provides a path of least resistance for electric current to reduce the risk of electric shock. This product is equipped with a cord having an equipment grounding conductor and a grounding plug. The plug must be plugged into an appropriate outlet that is properly installed and grounded in accordance with all local codes and ordinances.

⚠ DANGER:

- Improper connection of the equipment grounding conductor can result in risk of electrical shock.
- Check with a qualified electrician or service provider if you are in doubt as to whether the equipment is properly grounded or installed on a dedicated line.
- Seek a qualified electrician to perform any modifications to the cord or plug. TRUE is not responsible for injuries or damages as a result of cord or plug modification.
- To reduce the risk of burns, fire, electric shock, or injury, it is imperative to connect each product to a properly grounded 110V or 220V electrical outlet. The voltage required for your unit is located on the serial number decal (usually on the front of the unit). Depending on where you live voltage requirements differ.
- Some TRUE products require a circuit rated 110V, 60 Hz, and 20 amps. In the United States, most residential homes have circuits rated 110V, 60 Hz, and 15 amps. If your unit requires a 20 amp outlet, contact an electrician to install a dedicated 20 amp circuit prior to use.
- **110 Volt—**This model is for use on a nominal 110V circuit and has a grounding plug that looks like the plug illustrated in figure A. Make sure the product is connected to an outlet having the same configuration as the plug. No adapter should be used with this product.
- **220 Volt—**This model is for use on a circuit having a nominal rating no less than 208V and more than 240V and is factory equipped with a specific electric cord and has a grounding plug that looks like the plug illustrated in figure B. Make sure that the product is connected to an outlet having the same configuration as the plug in figure B. No adapter should be used with this product. If the product must be reconnected for use on a different type of electric circuit, the reconnection should be made by qualified service personnel.

FIGURE A

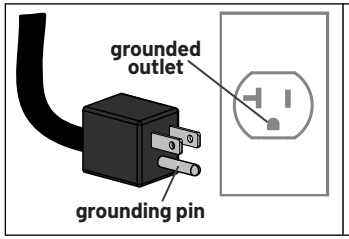

FIGURE B

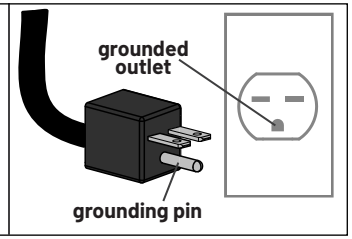

Power Information						
Model	**Line Voltage (V)**	**Frequency (Hz)**	**Rated Current (Amps)**	**Number of Units per Circuit**	**Plug/Outlet**	**Max Power Dissipation (Watt)**
XC1-0A-35	110	50/60Hz	20	Up to 5 ellipticals per circuit—DO NOT exceed	NEMA 5-20	350 watts per elliptical
	220	50/60Hz	8	Up to 5 ellipticals per circuit—DO NOT exceed	NEMA 6-15	350 watts per elliptical

NOTE: The plug configuration for the power adapter may vary by country.

NOTE: Power warnings, grounding instructions, and power requirements are only applicable when this product is being used with the optional power supply. Non-LED consoles require the optional power supply.

© 2026 TRUE Fitness All Rights Reserved.

SPACE REQUIREMENTS

TRUE recommends leaving a minimum of 24" (61cm) on each side of the equipment and a 79" (200cm) safety zone at the rear of the equipment. The free area also includes the area for emergency dismount. Where equipment is positioned adjacent to each other, the value of the free area may be shared.

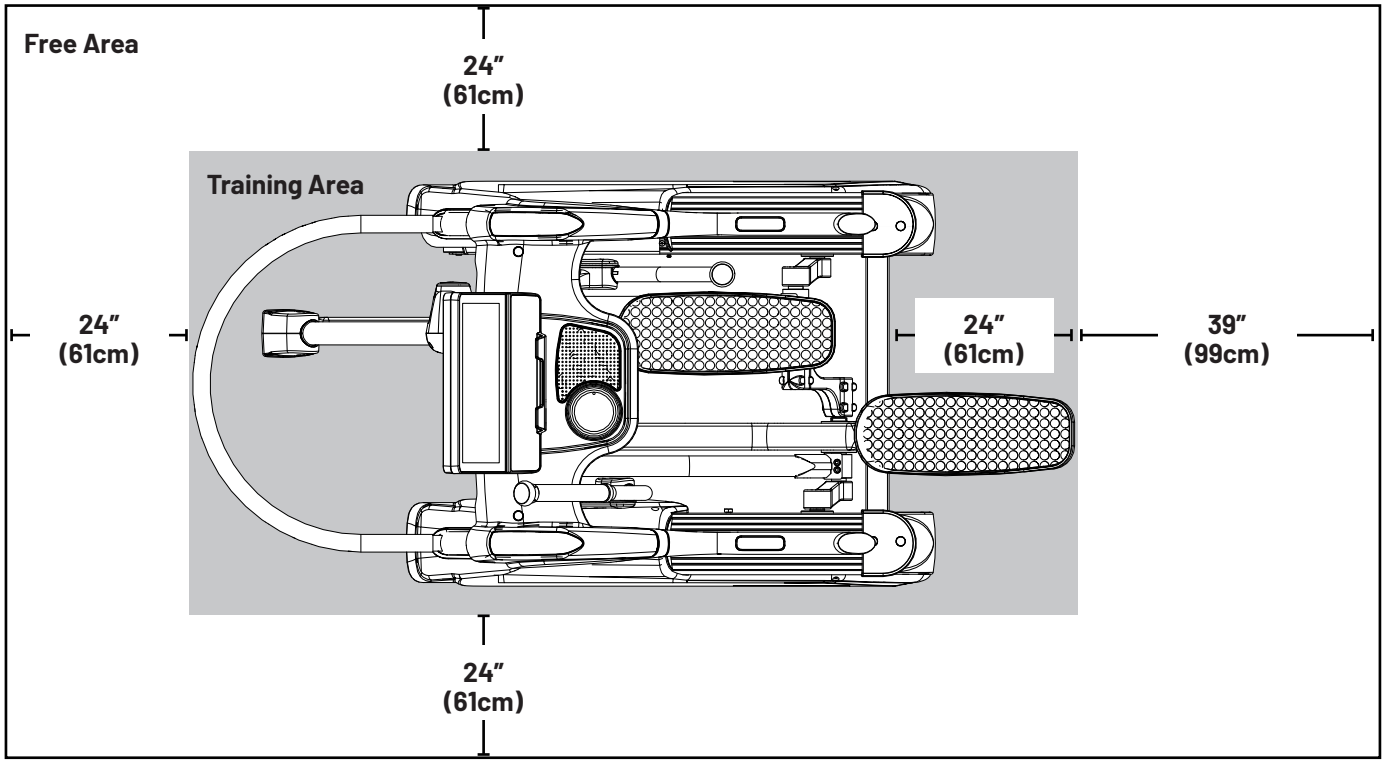

SPECIFICATIONS

- **DIMENSIONS (L X W X H)**
  - **Footprint**
    66" x 34" x 64" (167cm x 86cm x 163cm)
  - **Active Footprint**
    73" x 34" x 64"(185cm x 86cm x 163cm)
- **MACHINE WEIGHT**
  375 lbs / 170 kg
- **MAXIMUM USER WEIGHT**
  400 lbs / 181 kg

© 2026 TRUE Fitness All Rights Reserved.

WARNING DECALS

⚠WARNING: Replace warning labels that may be worn, damaged, or missing.

To replace any worn or missing decals contact TRUE product support (service@truefitness.com | 800.883.8783).

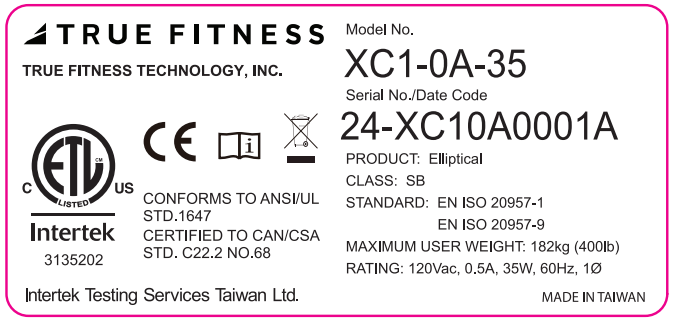

COMPLIANCES

This equipment complies with all applicable codes and regulations. For a complete list of compliances, please visit www.truefitness.com.

© 2026 TRUE Fitness All Rights Reserved.

PROPER USE

Proper Training Position

- Users should keep both feet on the footpads (A) during the workout.
- During a workout the user's hand should grasp the upper exercise arms (B).
- Users should remain standing throughout the workout.

Entry and Exit Safety

To Enter:

- Step up onto the side platforms.
- Grip the upper exercise arms for stability while stepping onto the lowest pedal.
- Place opposite foot onto the other pedal.

To Exit:

- Stop pedaling by slowing leg motion and applying slight resistance to the upper exercise arms.
- While gripping the upper exercise arms for stability, step from the highest pedal onto the side platform.
- Place the opposite foot on the other side platform.
- Step down off the machine.

NOTE: The elliptical trainer is not equipped with a free wheel, therefore the moving parts are unable to stop immediately.

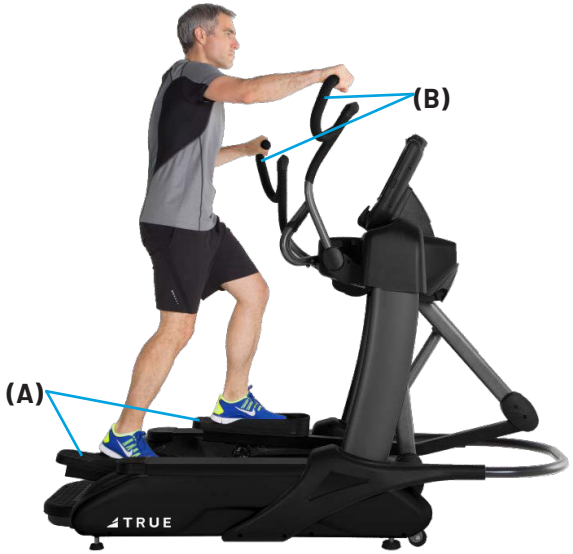

© 2026 TRUE Fitness All Rights Reserved.

ASSEMBLY INSTRUCTIONS

NOTE: Supplemental video available @TRUEFitnessservicevids: https://www.youtube.com/watch?v=H1ZQ0xf7w40

PREASSEMBLY CHECKLIST

BASIC GUIDELINES FOR SETTING UP THE EQUIPMENT

After removing the equipment from the packaging, place the equipment on a clean, level surface. Make sure the electrical cord easily reaches a grounded three-pronged outlet.

DANGER: Do not use an extension cord or ungrounded outlet. The ground helps prevent electrical damage to your equipment and enhances your safety by helping to prevent shock. Check with a qualified electrician or serviceman if you are in doubt as to whether the equipment is properly grounded. Do not modify the plug provided with the unit if it will not fit the outlet. Have a proper outlet installed by a qualified electrician.

CAUTION:

Use caution when assembling the equipment.
Unpacking and assembling of this product is a two person task.

Use caution when unpacking this product. Avoid damage to the product.
DO NOT use a box cutter. DO NOT slice into the packaging.

VERIFY BOX CONTENTS

IMPORTANT! Please verify box contents. If you have questions, or if there are any missing parts, contact product support (service@truefitness.com | 800.883.8783).

TOOLS NEEDED FOR ASSEMBLY		INCLUDED IN BOX
5mm Allen Wrench		NO
6mm Allen Wrench		NO
5/16" Allen Wrench		NO
17mm Wrench		NO
17mm Socket Wrench		NO

TOOLS NEEDED FOR ASSEMBLY		INCLUDED IN BOX
#2 Phillips Screwdriver		NO
Wire Cutters		NO
Plastic Pry		NO
Tape Measure		NO

© 2026 TRUE Fitness All Rights Reserved.

BOX CONTENTS

ITEM	DESCRIPTION	QTY
1	BASE	1
2	LEFT INNER SHROUD	1
3	RIGHT INNER SHROUD	1
4	PEDESTAL	1
5	LEFT DRAWBAR	1
6	RIGHT DRAWBAR	1
7	LEFT DRAWBAR COVER	1
8	RIGHT DRAWBAR COVER	1
9	LEFT SIDE ARM	1
10	RIGHT SIDE ARM	1
11	LEFT UPPER EXERCISE ARM	1
12	RIGHT UPPER EXERCISE ARM	1
13	LEFT EXERCISE ARM COVER	1
14	RIGHT EXERCISE ARM COVER	1
15	PEDAL TUBES	2
16	ROCKER TUBE COVERS	2
17	CONSOLE MAST	1
18	CONSOLE MAST COVER	1
19	REAR CONSOLE COVER	1
20	FRONT GUARD TUBE	1
21	FOOT PADS	2
22	HARDWARE BAG(S)	1
23	MANUAL	1

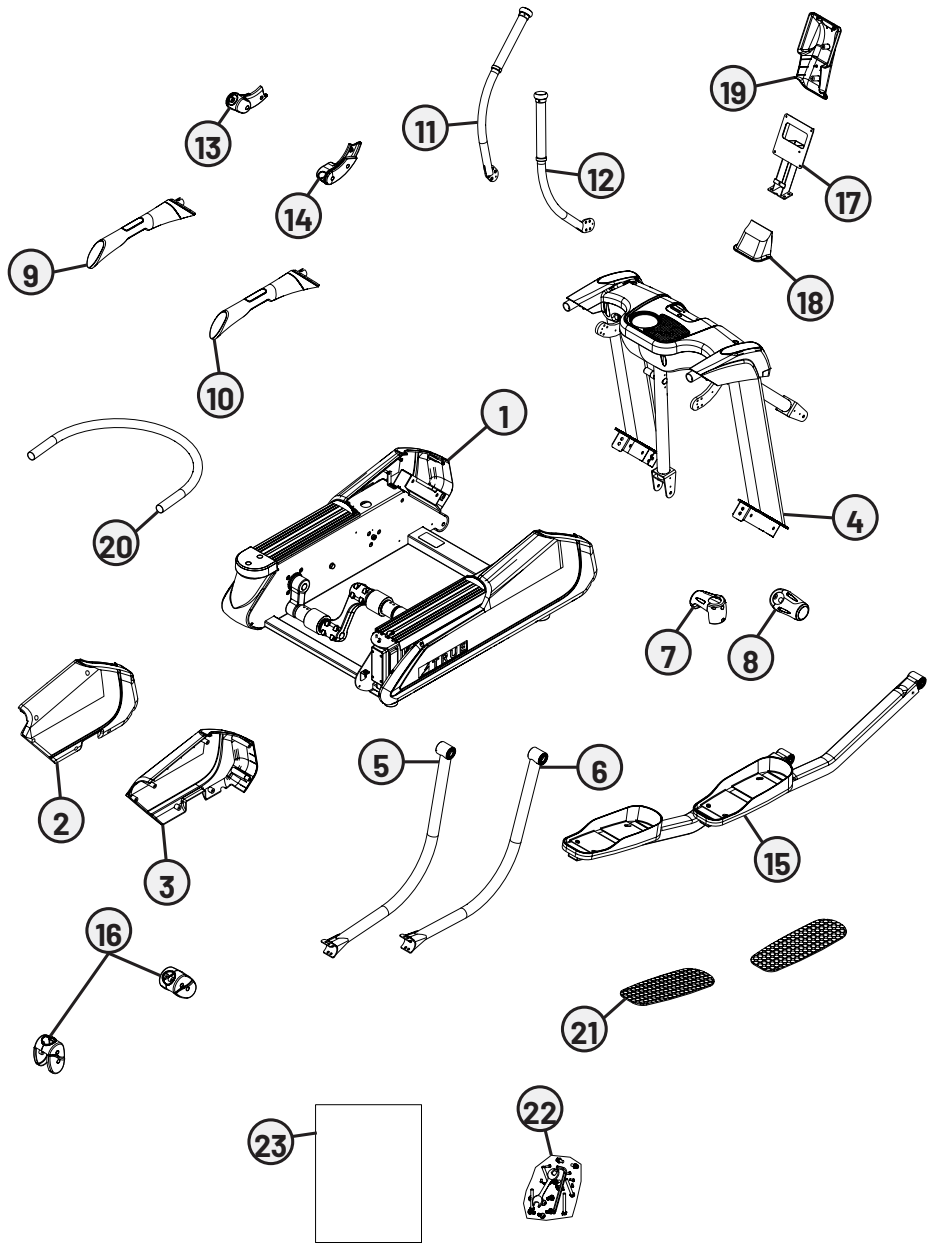

© 2026 TRUE Fitness All Rights Reserved.

HARDWARE PACK CONTENTS

XCS0085 Hardware Pack

STEP 1		
ITEM	**DESCRIPTION**	**QTY**
XCS0096	SHCS, M10-1.5 X 20MM, LP, BLK	8
XCS0313	SHCS, M10-1.5 X 70MM, BLK 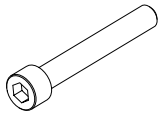	4

STEP 2		
ITEM	**DESCRIPTION**	**QTY**
XPS0078	TRUSS HD TAPPING SCREW, M4 X 16MM	4
CX0501	PHMS, M5-0.8 X 12MM	6
XCS90091	SCREW, PAN HEAD, M5 X 0.8 X 30, SS 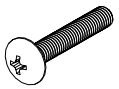	2
CX0511	PHMS, M4-0.7 X 16MM	8

STEP 3 (NOTE: Bag may be labeled Step 4.)		
ITEM	**DESCRIPTION**	**QTY**
PX0153	HHS, M10-1.5 X 20MM, ZP	2
SX0099	LOCK WASHER, M10, BLK, ZP	2
PX0154	WASHER, FLAT, M10 X 35MM OD X 2MM, BLK 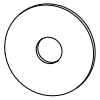	2
XC90050	SCHS, M8-1.25 X 12MM	8
XC90051	WASHER, M8 X 14MM OD X 2MM	8
CX0102	PHMS, M3-0.5 X 12MM, BLK	6
SX0004	PHMS, M5-0.8X12MM, CRE, RE	4

© 2026 TRUE Fitness All Rights Reserved.

HARDWARE PACK CONTENTS

STEP 5 (NOTE: Bag may be labeled Step 7.)		
ITEM	**DESCRIPTION**	**QTY**
SX0115	HHS, M10-1.5 X 81.5MM, LP 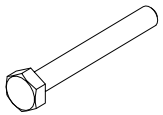	2
SX0116	HEX NUT, HEX, M10, ZP	2
SX0004	PHMS, M5-0.8X12MM, CRE, RE	8

STEP 7 (NOTE: Bag may be labeled Step 6.)		
ITEM	**DESCRIPTION**	**QTY**
TS1275	COUNTERSUNK SHCS, M8 X 16MM, LP, ZP 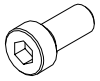	8
CX0063	PHMS, M5-0.8 X 8MM, LP, BLK	8

STEP 8 (NOTE: Bag may be labeled Step 5.)		
ITEM	**DESCRIPTION**	**QTY**
TI0229	SHCS, M8-1.25 X 12MM, BLK	4

STEP 9 (NOTE: Bag may be labeled Step 8.)		
ITEM	**DESCRIPTION**	**QTY**
XCS0097	SHCS, M8-1.25 X 16MM, LP, BLK	4

STEP 10 (NOTE: Bag may be labeled Step 9.)		
ITEM	**DESCRIPTION**	**QTY**
XPS0078	TRUSS HD TAPPING SCREW, M4 X 16MM	2
CX0079	PHMS, M5-0.8 X 12MM, BLK, ZP	2

STEP 11 (NOTE: Bag may be labeled Step 10.)		
ITEM	**DESCRIPTION**	**QTY**
VC90167	BHCS, M8-1.25 X 12MM, SS	4

© 2026 TRUE Fitness All Rights Reserved.

ASSEMBLY STEPS

Preassembly Step 1—Measure Doorways

Tools Used in this Step	
Tape Measure	

Parts Used in this Step			
Item	**Part**	**Description**	**Qty**
1	XCS9019-35	SUBASSEMBLY, BASE, XC900	1

NOTE: Follow these instructions if the unit needs to be moved.

A. Using a tape measure, measure all doorways, hallways, and stairwells to make sure that the 33" frame can fit through them.

B. If it will not fit, move all parts to the final location and assemble machine in that location. If the machine needs to be placed on its side, separate the pedestal from the base and keep the left side foam packaging attached to the base to help avoid damaging the plastic covers. Set the base on the foam or the feet only.

NOTE: The base can be set on its left side, but only with the attached foam packaging underneath it.

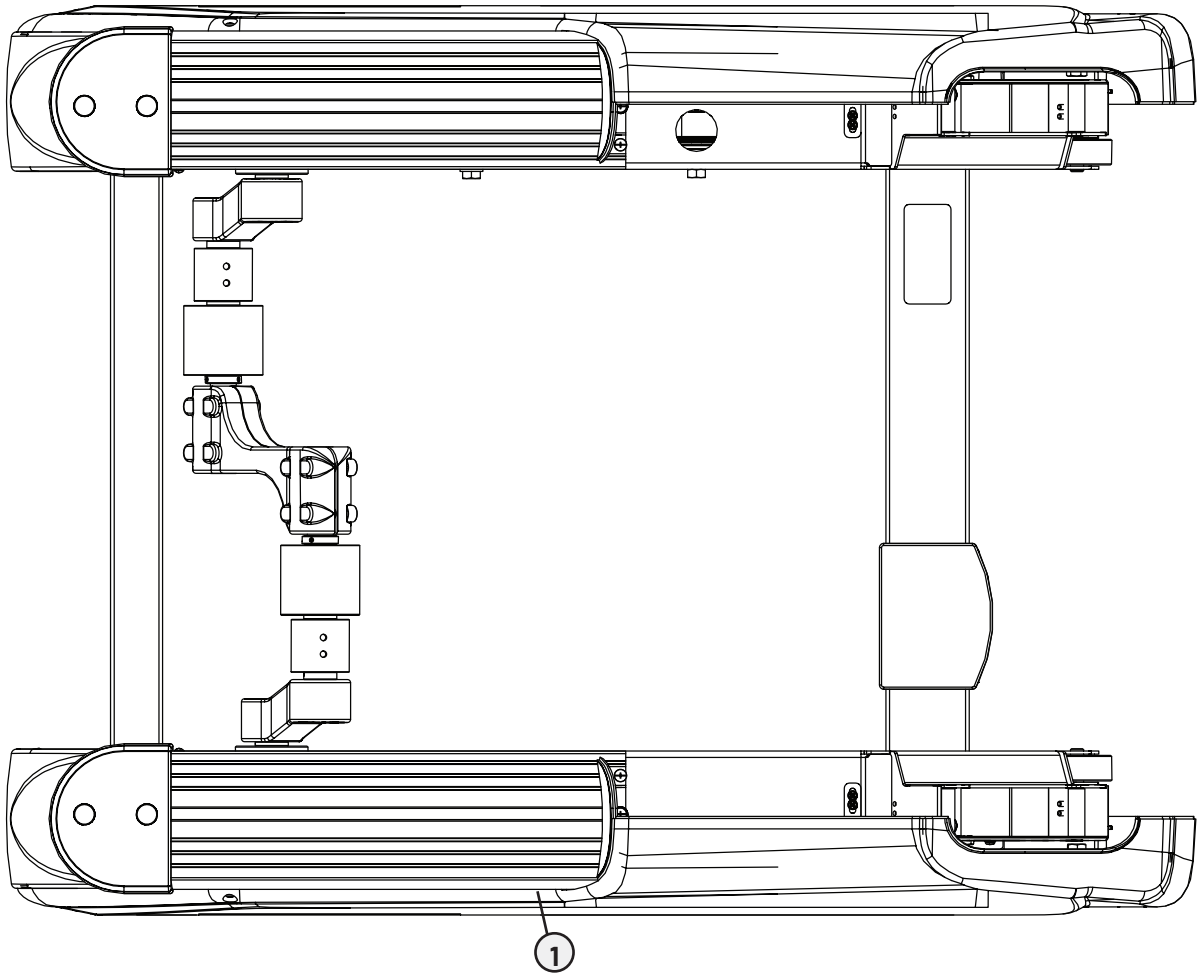

© 2026 TRUE Fitness All Rights Reserved.

Step 1—Attach Pedestal

Tools Used in this Step	
#2 Phillips Screwdriver	
5/16" Allen Wrench	

Parts Used in this Step			
Item	**Part**	**Description**	**Qty**
1	XCS9023-35	ASSEMBLY, PEDESTAL, XC900	1
2	XCS0096	SHCS, M10-1.5 X 20MM, LP, BLK	8
3	XCS0313	SHCS, M10-1.5 X 70MM, BLK	4

A. Carefully slide the pedestal down onto the base.

NOTE: Use two people while sliding the pedestal onto the base.

IMPORTANT! One person must spread open the outer shrouds while the other carefully secures the pedestal to the base.

IMPORTANT! Pull the cables out before securing the pedestal.

B. Using a 8mm allen wrench, attach the pedestal to the base using 8 hex screws and 4 longer hex screws.

C. Connect the cables coming from the right pedestal to the corresponding cables coming out of the frame.

IMPORTANT! DO NOT pinch the cables.

D. Securely tuck away the pedestal cables.

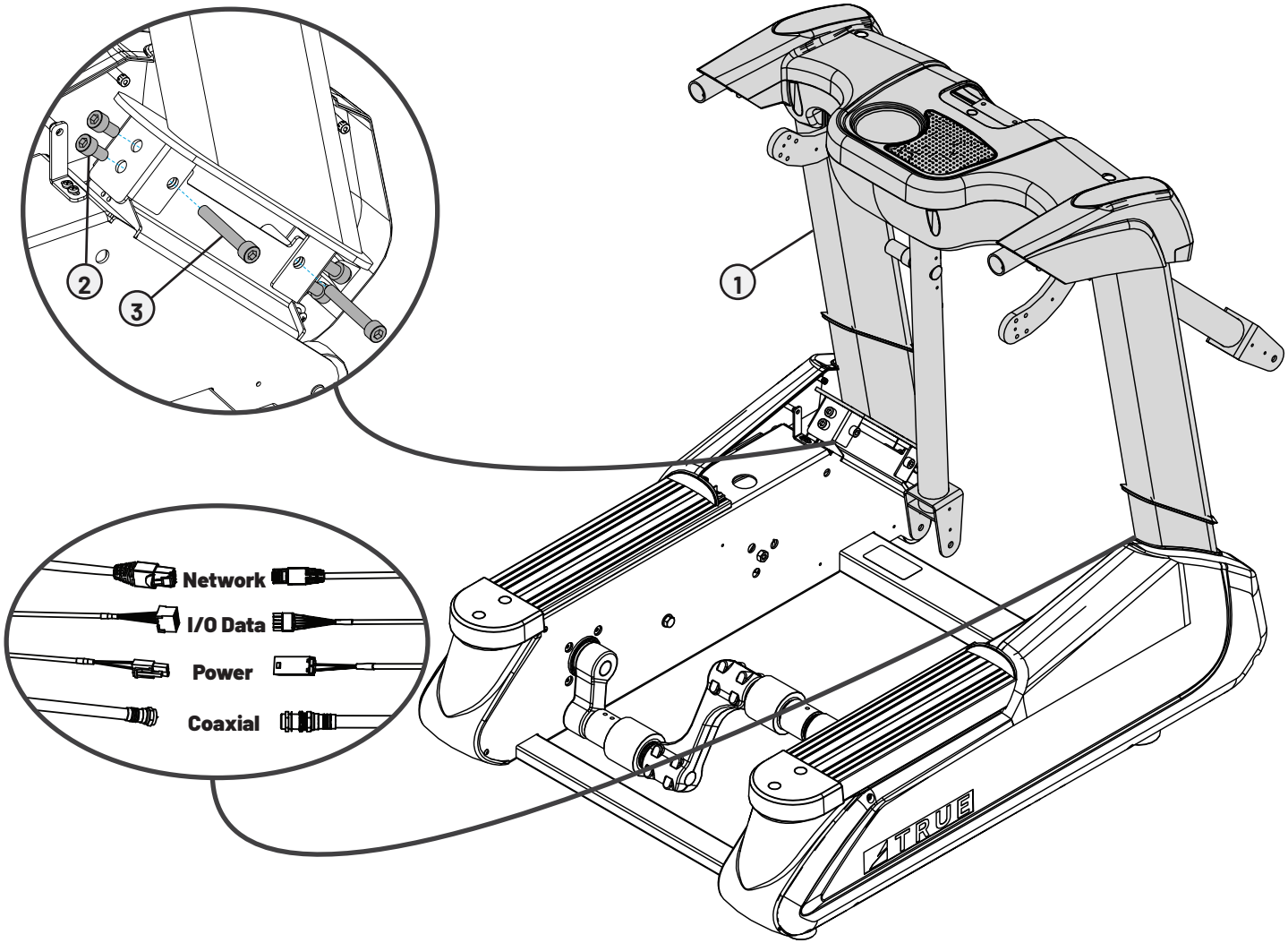

© 2026 TRUE Fitness All Rights Reserved.

Step 2—Attach Inner Shrouds

Tools Used in this Step	
#2 Phillips Screwdriver	

A. Using a #2 Phillips screwdriver, attach 6 screws to the left and right outer shrouds.

Parts Used in this Step			
Item	**Part**	**Description**	**Qty**
1	XCS9015-71	ASSEMBLY, COVER, LEFT OUTER	1
2	XCS9014-71	ASSEMBLY, COVER, RIGHT	1
3	XCS9012-71	COVER, INNER, LEFT	1
4	XCS9013-71	COVER, INNER, RIGHT	1
5	XCS9020-71	GASKET XC900	2
6	XPS0078	TRUSS HD TAPPING SCREW, M4 X 16MM	4
7	CX0501	PHMS, M5-0.8 X 12MM	6
8	XCS90091	SCREW, PAN HEAD, M5 X 0.8 X 30, SS	2
9	CX0511	PHMS, M4-0.7 X 16MM	8

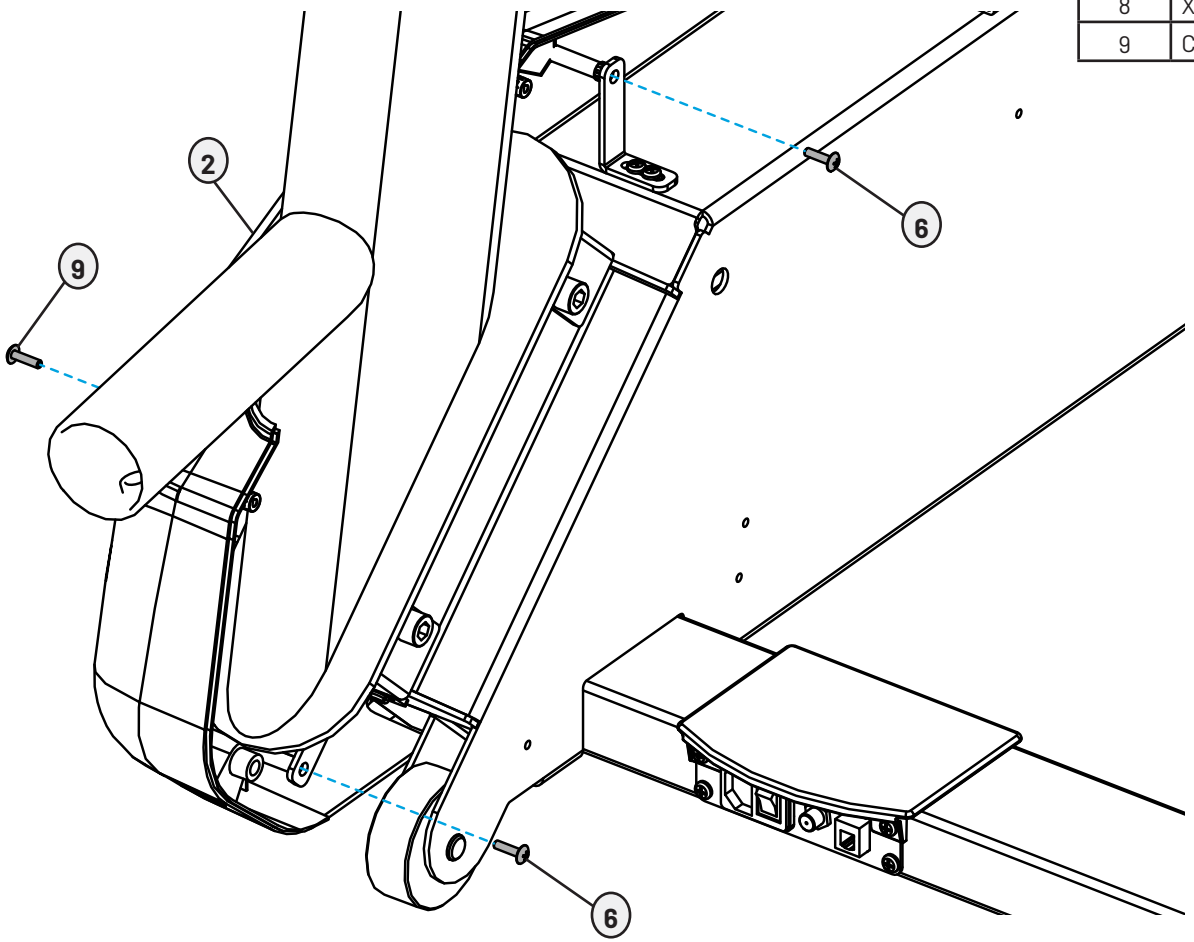

© 2026 TRUE Fitness All Rights Reserved.

Step 2—Attach Inner Shrouds Continued

B. Using a #2 Phillips screwdriver, attach the left and right inner shrouds to the base using 6 12mm screws, 6 16mm screws, and 2 long pan head screws.

C. Slide the black rubber gaskets down the pedestal uprights until they are flush against the shrouds.

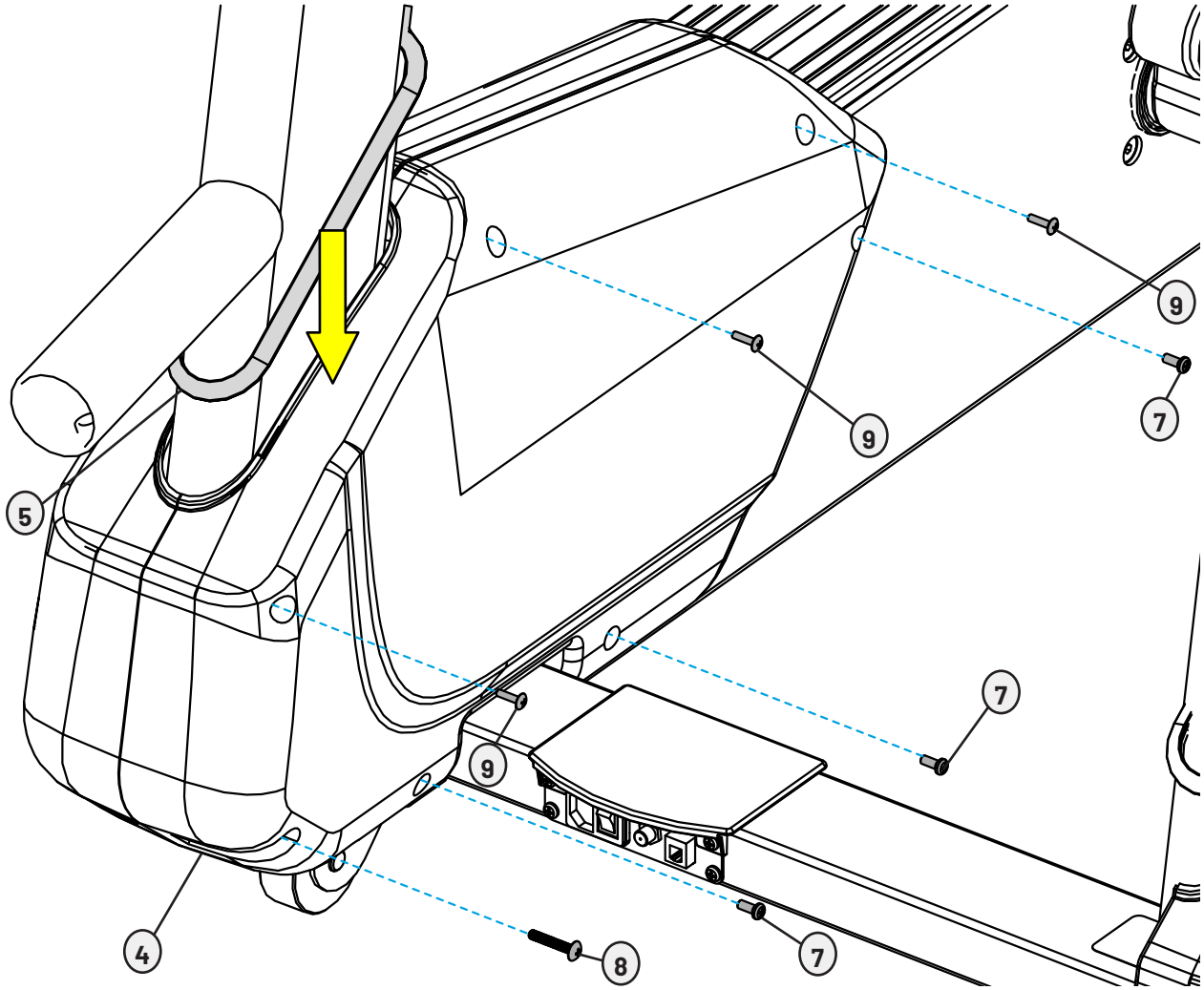

© 2026 TRUE Fitness All Rights Reserved.

Step 3—Attach Drawbars and Drawbar Covers

Tools Used in this Step	
6mm Allen Wrench	
17mm Socket Wrench	
#2 Philips Screwdriver	

Parts Used in this Step			
Item	**Part**	**Description**	**Qty**
1	XCS0362-35	SUBASSEMBLY, DRAWBAR, LEFT	1
2	XCS0363-35	SUBASSEMBLY, DRAWBAR, RIGHT	1
3	CE90172BK	COVER, SIDE, LEFT, OUTER	1
4	CE90173BK	COVER, SIDE, LEFT, INNER	1
5	CE90174BK	COVER, SIDE, RIGHT, INNER, BLK	1
6	CE90175BK	COVER, SIDE, RIGHT, OUTER, BLK	1
7	PX0153	HHS, M10-1.5 X 20MM, ZP	2
8	SX0099	LOCK WASHER, M10, BLK, ZP	2
9	PX0154	WASHER, FLAT, M10 X 35MM OD X 2MM, BLK	2
10	XC90050	SCHS, M8-1.25 X 12MM	8
11	XC90051	WASHER, M8 X 14MM OD X 2MM	8
12	CX0102	PHMS, M3-0.5 X 12MM, BLK	6
13	SX0004	PHMS, M5-0.8X12MM, CRE, RE	4

A. Attach each drawbar to its corresponding shaft using 2 bolts, 2 lock washers, and 2 flat washers, but do not tighten.

   NOTE: The drawbars are labeled **L** for left and **R** for right.

B. Using a 17mm socket, tighten the 2 bolts, 2 lock washers, and 2 flat washers.

C. Attach the bottoms of the drawbars to the base using 8 hex screws and 8 curved washers, but do not tighten.

D. Using a 6mm allen wrench, tighten the 8 hex screws and 8 curved washers.

E. Using a #2 Phillips screwdriver, attach the left and right drawbar covers using 6 screws and 4 larger screws.

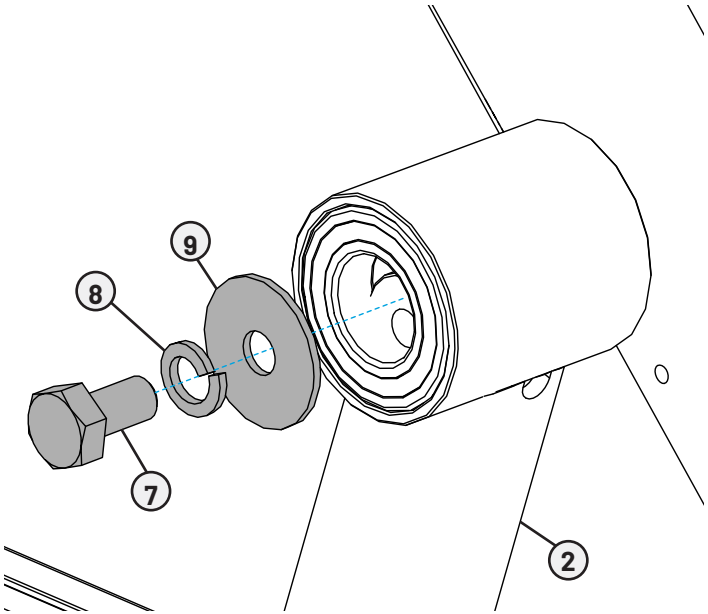

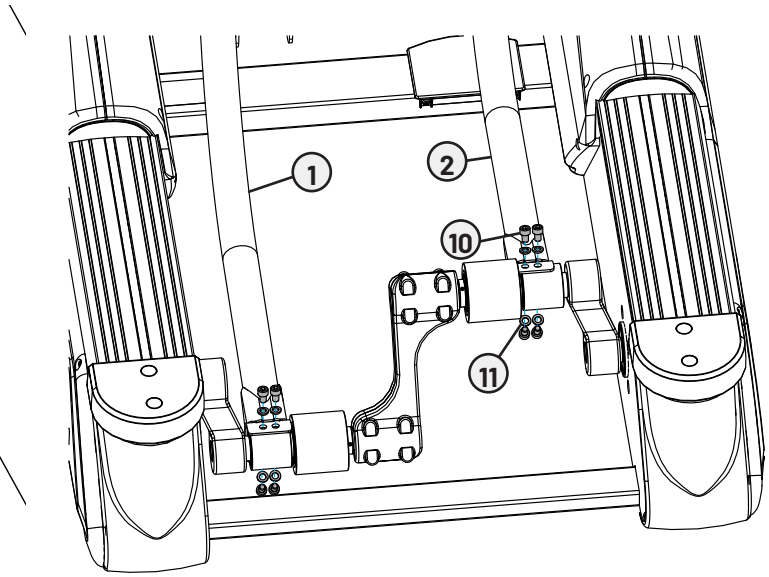

© 2026 TRUE Fitness All Rights Reserved.

Step 3—Attach Drawbars and Drawbar Covers Continued

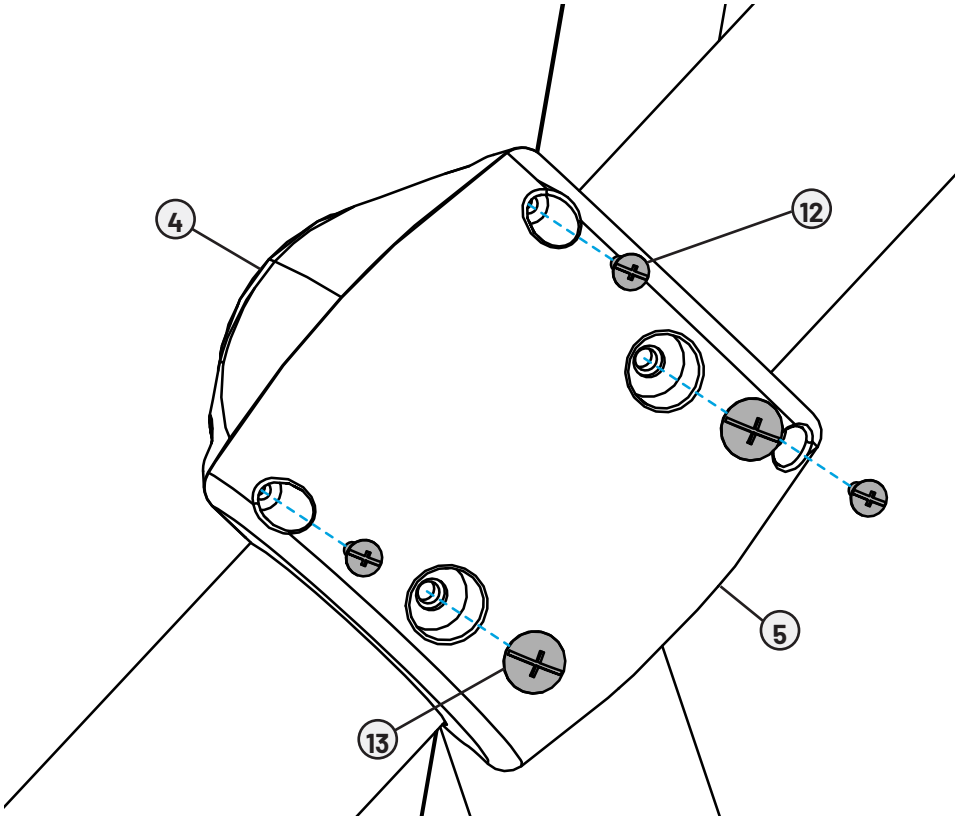

© 2026 TRUE Fitness All Rights Reserved.

Optional Step 4—Install Auxiliary Power Supply

Tools Used in this Step	
#2 Phillips Screwdriver	
Wire Cutters	
Plastic Pry	

Parts Used in this Step			
Item	**Part**	**Description**	**Qty**
1	XCS0072RBK	REAR SHROUD COVER ASSEMBLY RIGHT	1
2	XCS0348BK	COVER, STRADDLE COVER END CAP RIGHT	1
3	CX0501	PHMS, M5-0.8 X 12MM	1
4	CX0506	SCREW, M4 X 15MM	3
5	CX0079	PAN HD SCREW M5 X 0.8-12	2
6	CX0120	COVER CAP	2
7	XCS0101	CABLE, POWER	1
8	00595500	POWER SUPPLY, FUYANG 12V 6A	1

NOTE: Power warnings, grounding instructions, and power requirements are only applicable when this product is being used with the optional power supply. Non-LED consoles require the optional power supply.

IMPORTANT! Be sure to switch power cable connections before installing the optional auxiliary power supply.

A. Using a plastic pry and a #2 Phillips screwdriver, remove the right rear plastic covers using 2 plugs and 6 screws.

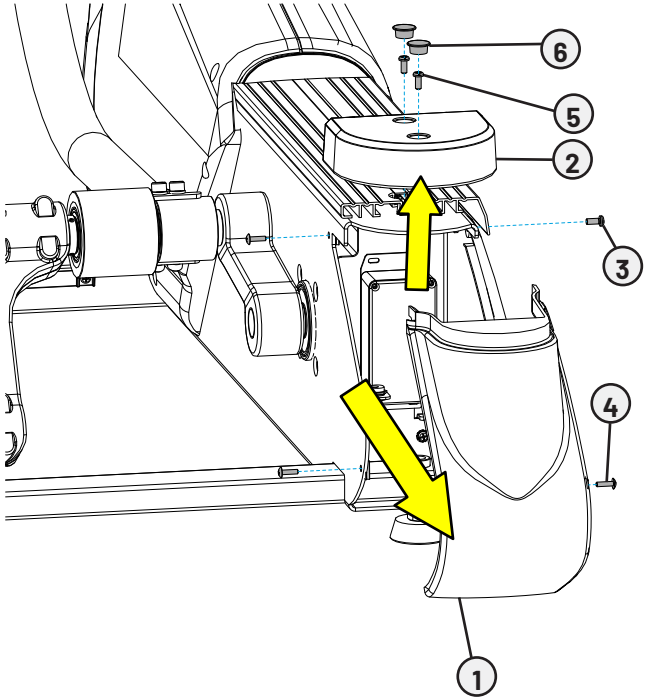

© 2026 TRUE Fitness All Rights Reserved.

Optional Step 4—Install Auxiliary Power Supply Continued

B. Using wire cutters, cut the zip tie that holds the power cable.

C. Switch the power cable connection from the self-generated connection to the power supply connection.

D. Connect the input and output plugs to the power supply.

IMPORTANT! DO NOT plug the power supply into the battery charge port.

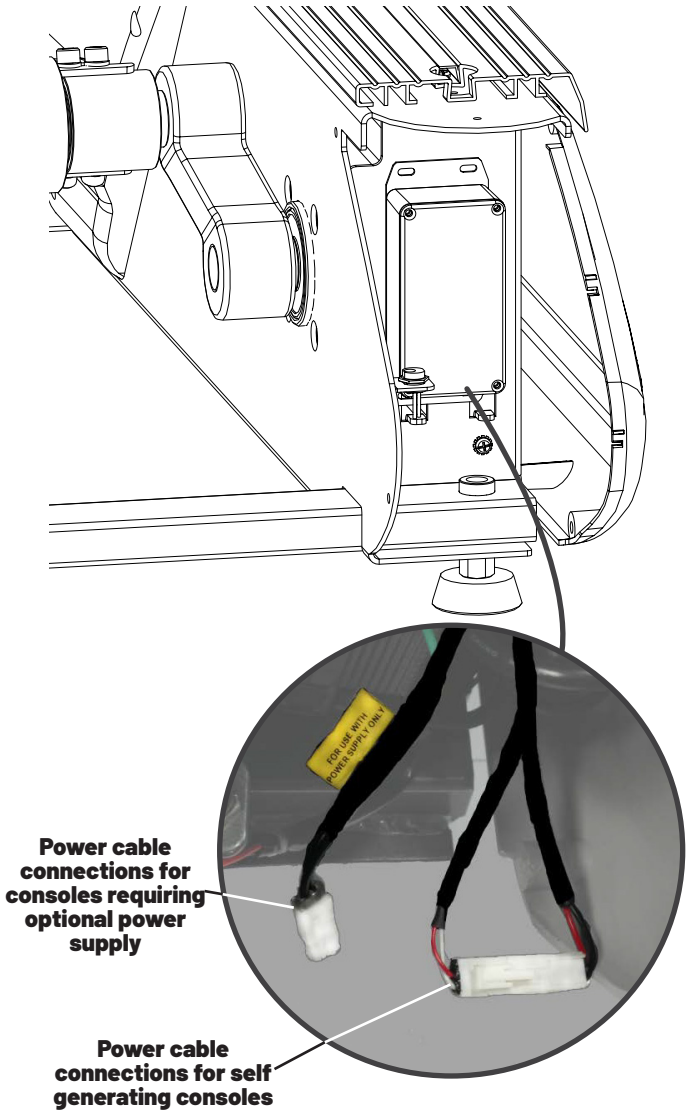

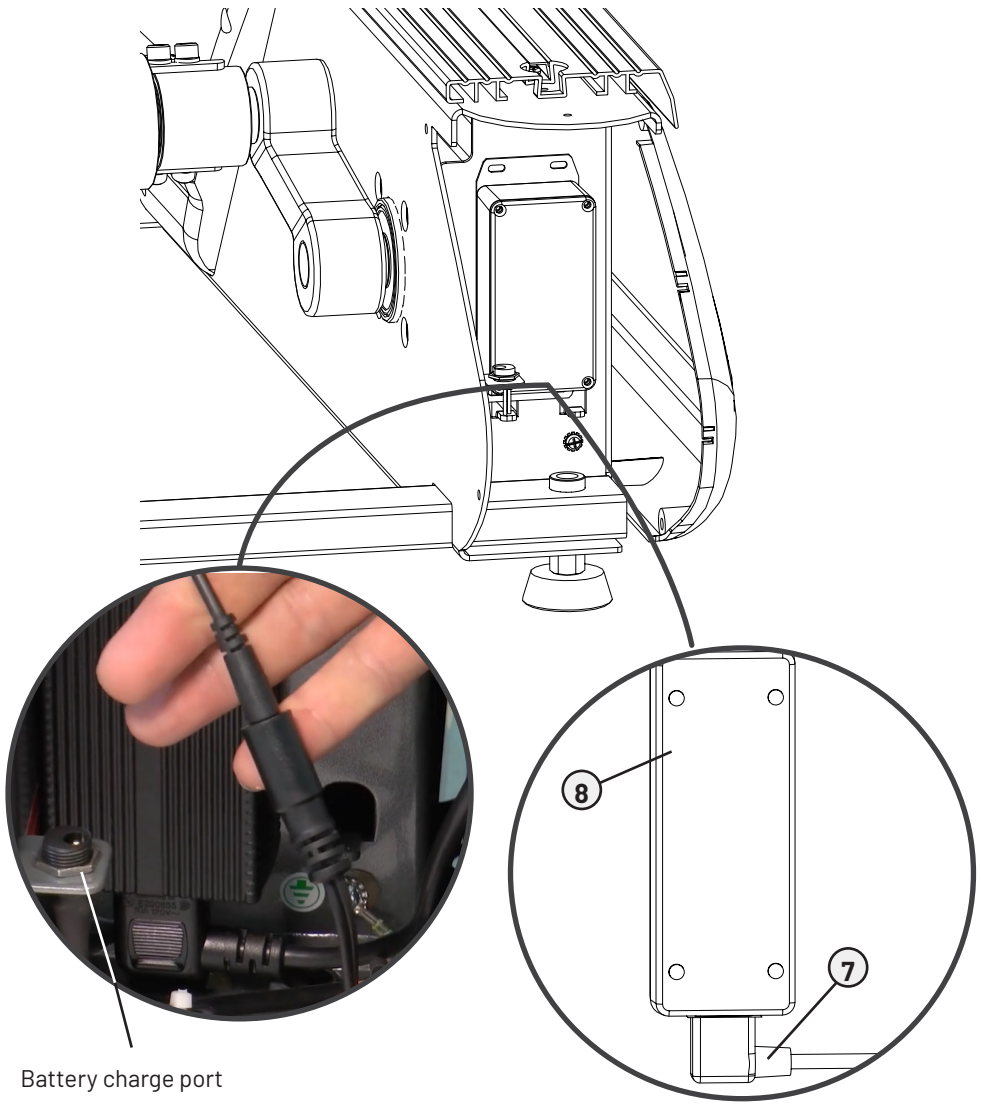

© 2026 TRUE Fitness All Rights Reserved.

Optional Step 4—Install Auxiliary Power Supply Continued

E. Secure the power supply to the bracket using 1 zip tie.

NOTE: Tuck excess cables into the shroud opening.

F. Using a #2 Phillips screwdriver, reattach the right rear covers using the 6 screws and 2 plugs you removed previously.

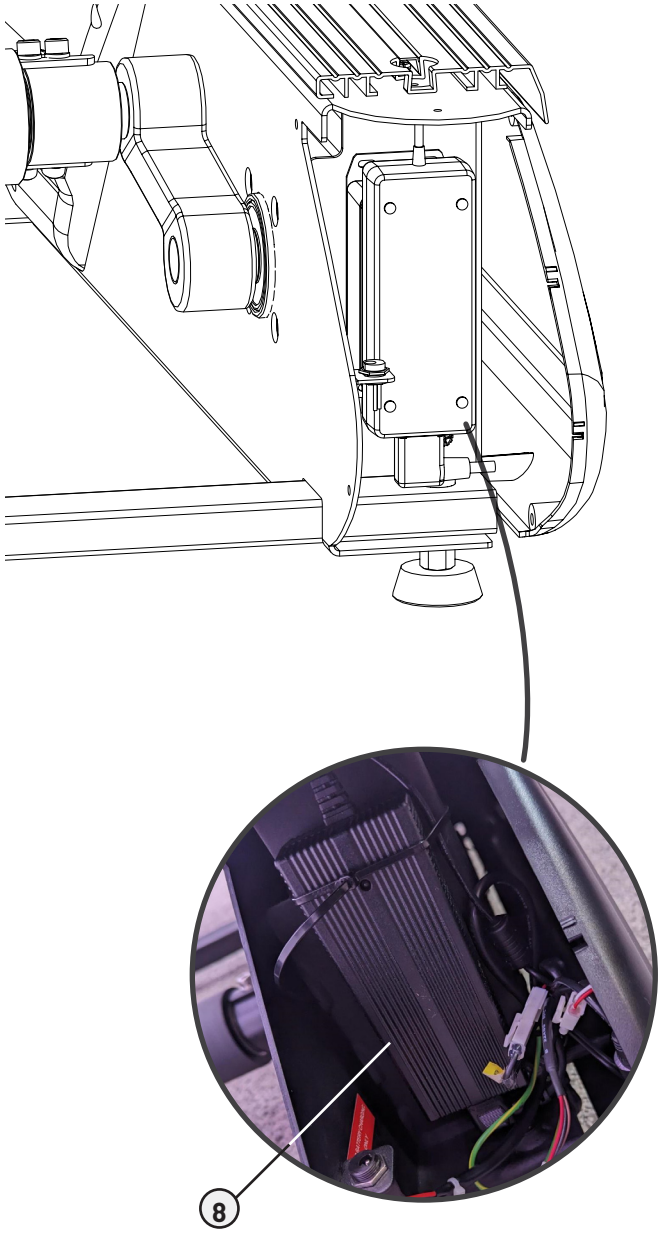

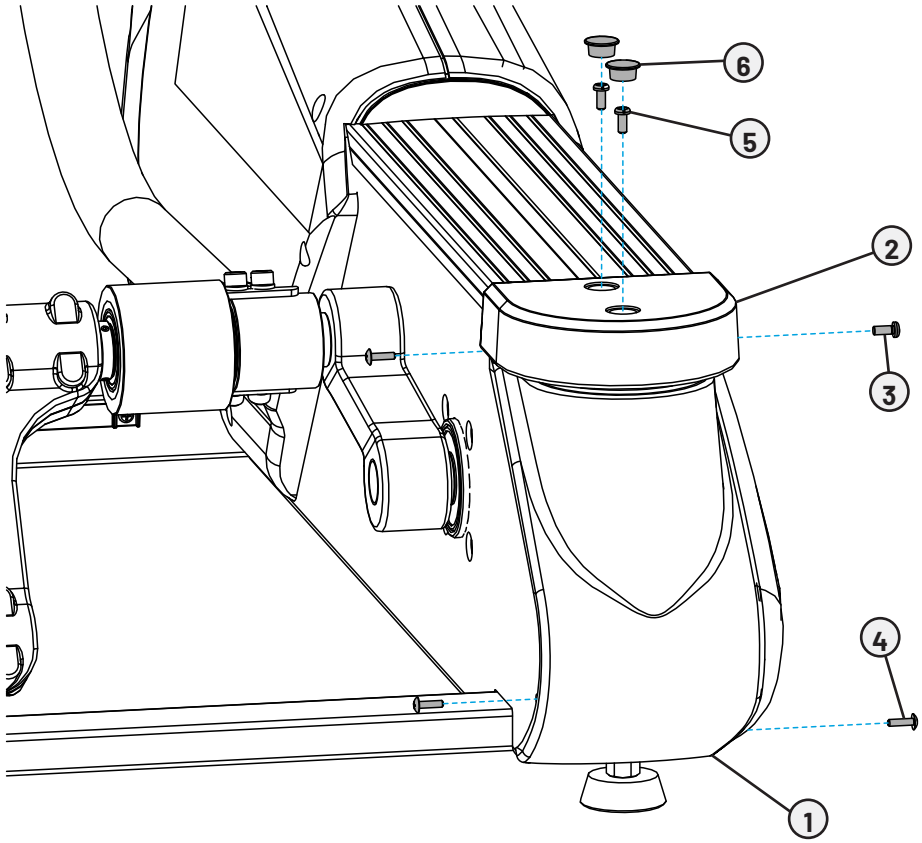

© 2026 TRUE Fitness All Rights Reserved.

Step 5—Attach Pedal Tubes and Rocker Arm Covers

Tools Used in this Step	
17mm Socket Wrench	
17mm Wrench	
#2 Phillips Screwdriver	

Parts Used in this Step			
Item	**Part**	**Description**	**Qty**
1	XCS0072RBK	SUBASSEMBLY, PEDAL TUBE, WITH FOOT SKATE, BLACK	2
2	XCS0348BK	COVER, BRACKET, RIGHT	2
3	CX0501	COVER, BRACKET, LEFT	2
4	CX0506	HHS, M10-1.5 X 81.5MM, LP	2
5	CX0079	HEX NUT, HEX, M10, ZP	2
6	CX0120	PHMS, M5-0.8X12MM, CRE, RE	8

A. Using a 17mm socket and wrench, attach the pedal tubes using two bolts and two nuts.

NOTE: Ensure that the pedal tubes are centered on the crankshaft rollers before tightening.

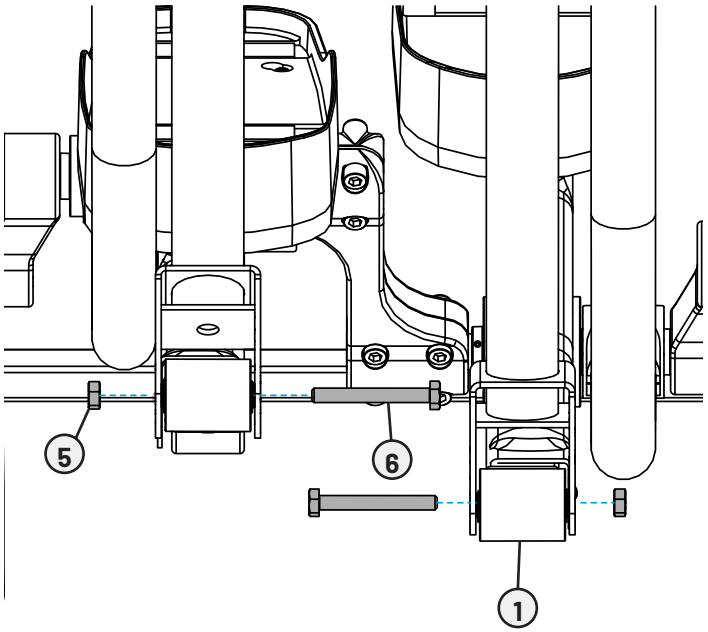

B. Using a #2 Phillips screwdriver, attach the rocker arm covers using eight screws.

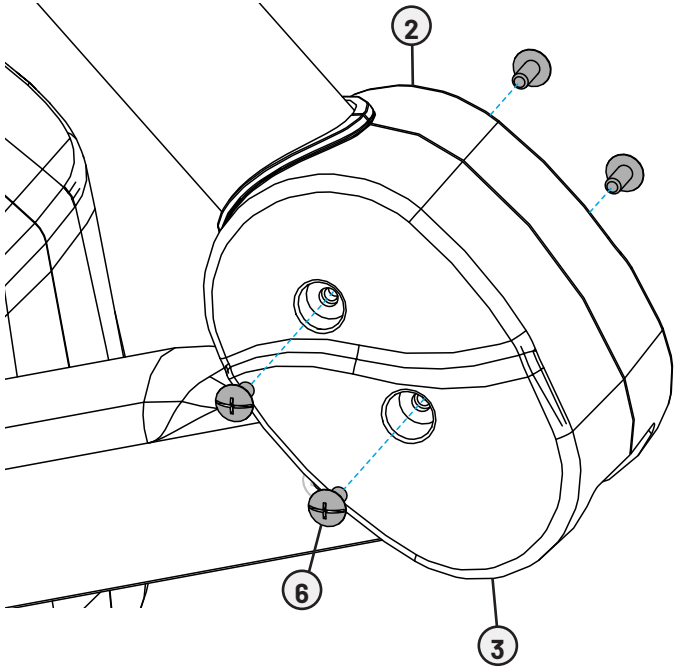

© 2026 TRUE Fitness All Rights Reserved.

Step 6–Attach Foot Pads

Parts Used in this Step			
Item	**Part**	**Description**	**Qty**
1	XCS0059	FOOT SKATE	2
2	00597000	FOOT PAD, MERAMEC - XCS900	2

Insert and press down the foot pads into the plastic foot skates and ensure they are secured by the fastening strips.

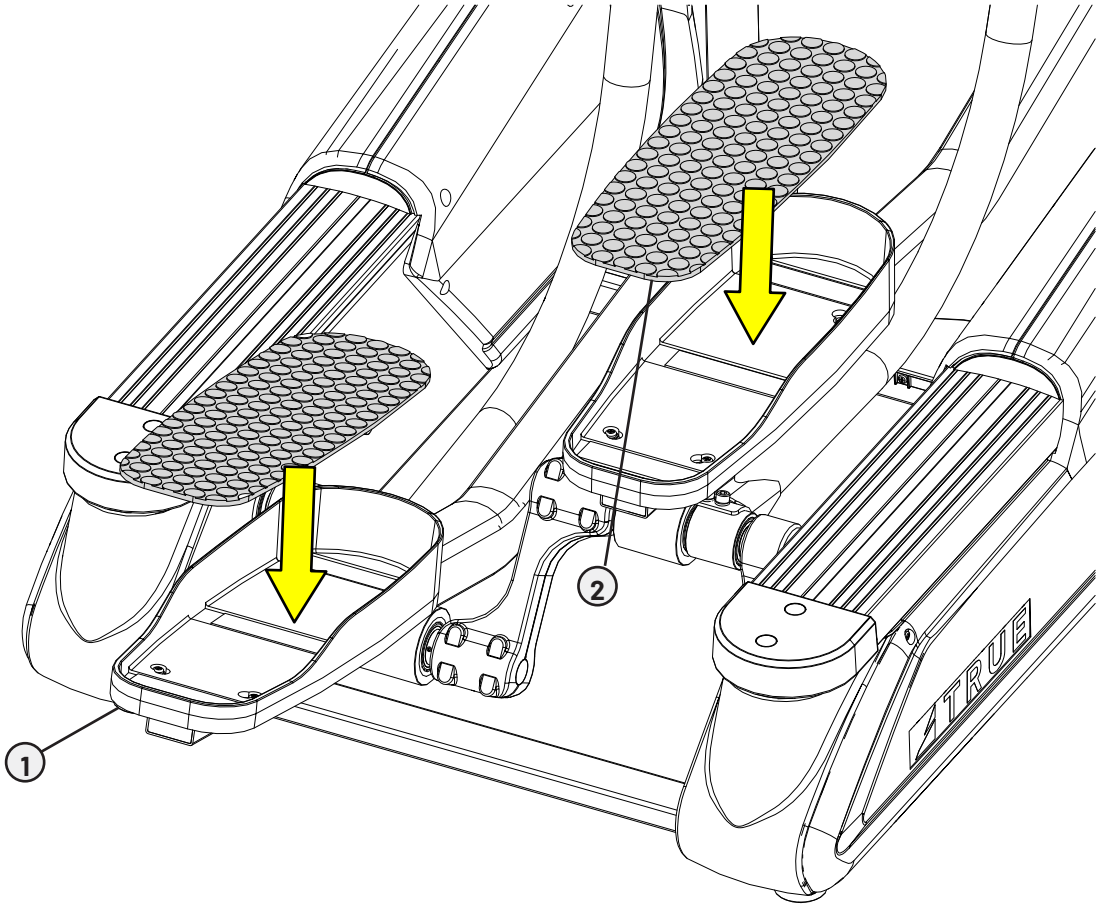

© 2026 TRUE Fitness All Rights Reserved.

Step 7—Attach Upper Exercise Arms

Tools Used in this Step	
6mm Allen Wrench	
#2 Phillips Screwdriver	

Parts Used in this Step			
Item	**Part**	**Description**	**Qty**
1	XCS0025A-35	SUBASSEMBLY, UPPER EXERCISE ARM XCS400/R; XCS900/L	1
2	XCS0025B-35	SUBASSEMBLY, UPPER EXERCISE ARM XCS400/L; XCS900/R	1
3	XCS0339BK	COVER, INSIDE HANDLE BAR, LEFT	1
4	XCS0340BK	COVER, OUTSIDE HANDLE BAR, LEFT	1
5	XCS0341BK	COVER, SHAFT, OUTSIDE, RIGHT	1
6	XCS0342BK	COVER, SHAFT, INSIDE, RIGHT	1
7	TS1275	COUNTERSUNK SHCS, M8 X 16MM, LP, ZP	6
8	CX0063	PHMS, M5-0.8 X 8MM, LP, BLK	8

A. Using a 6mm allen wrench, attach the upper exercise arms using eight hex screws.

NOTE: The upper exercise arms are labeled **L** for left and **R** for right.

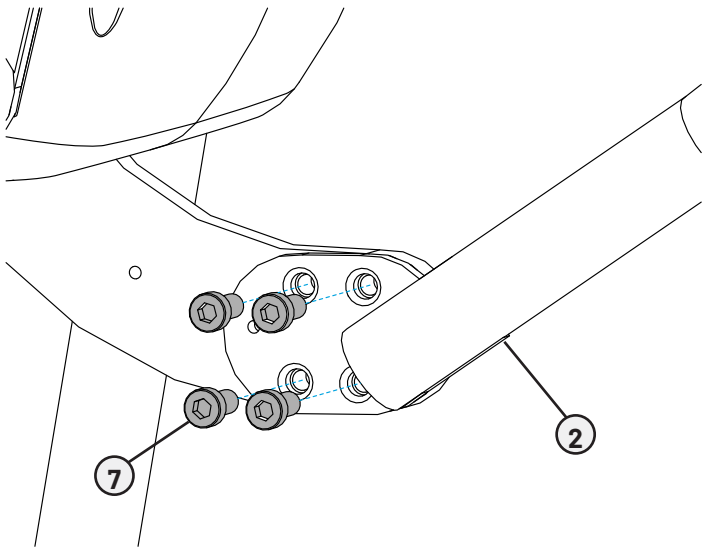

B. Using a #2 Phillips screwdriver, attach the exercise arm covers using eight screws.

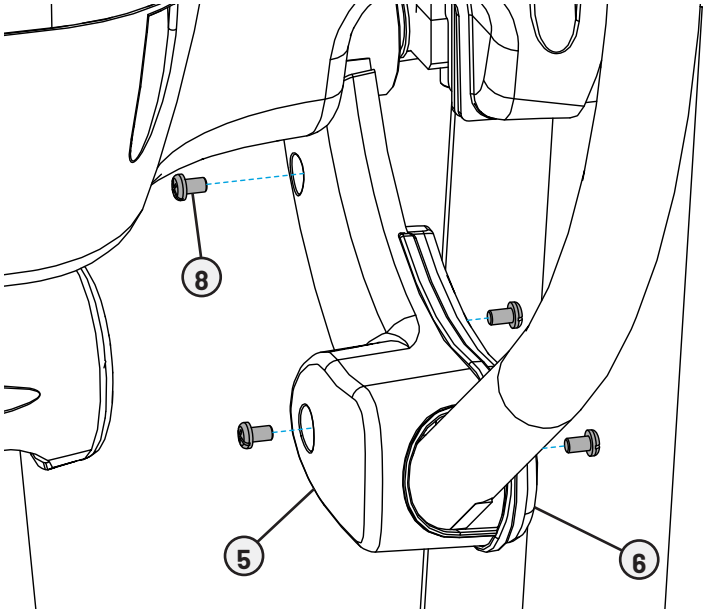

© 2026 TRUE Fitness All Rights Reserved.

Step 8—Attach Side Arms

Tools Used in this Step	
6mm Allen Wrench	

Parts Used in this Step			
Item	**Part**	**Description**	**Qty**
1	XCS0065LBK	COVER, INNER, LEFT	1
2	XCS0065RBK	COVER, INNER, RIGHT	1
3	TI0229	SHCS, M8-1.25 X 12MM, BLK	4

A. Connect the side arm heart rate cables.

B. Carefully slide the side arms into the pedestal and tuck the heart rate cables into the tubes.

IMPORTANT! DO NOT pinch the cables.

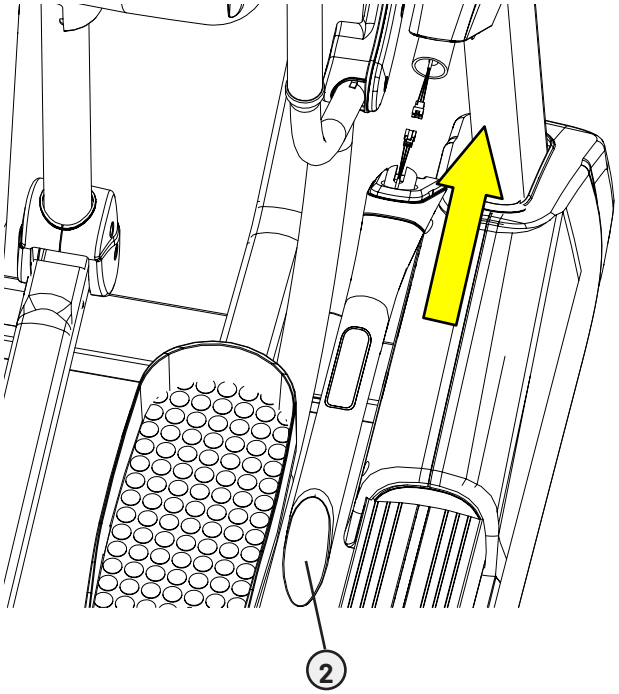

C. Using a 6mm allen wrench, attach the side arms to the pedestal using four hex screws.

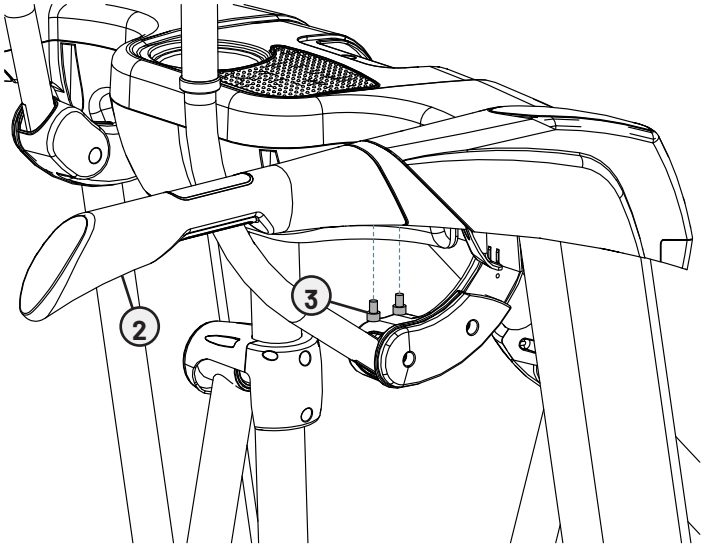

© 2026 TRUE Fitness All Rights Reserved.

Step 9—Attach Console Mast

Tools Used in this Step	
6mm Allen Wrench	

Parts Used in this Step			
Item	Part	Description	Qty
1	XCS0323-35	WELDMENT, CONSOLE MAST ASSEMBLY	1
2	XCS0097	SHCS, M8-1.25 X 16MM, LP, BLK	4

A. Slide the console cables through the larger opening near the top of the console mast.

IMPORTANT! DO NOT pinch the cables.

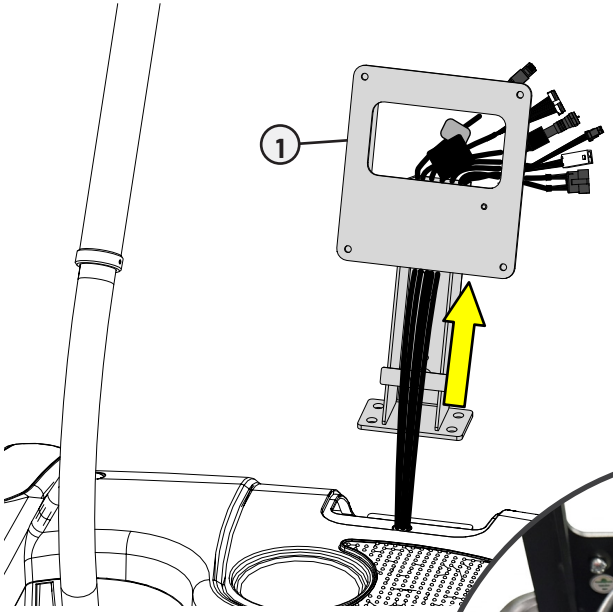

B. Using a 6mm allen wrench, attach the console mast using four hex screws.

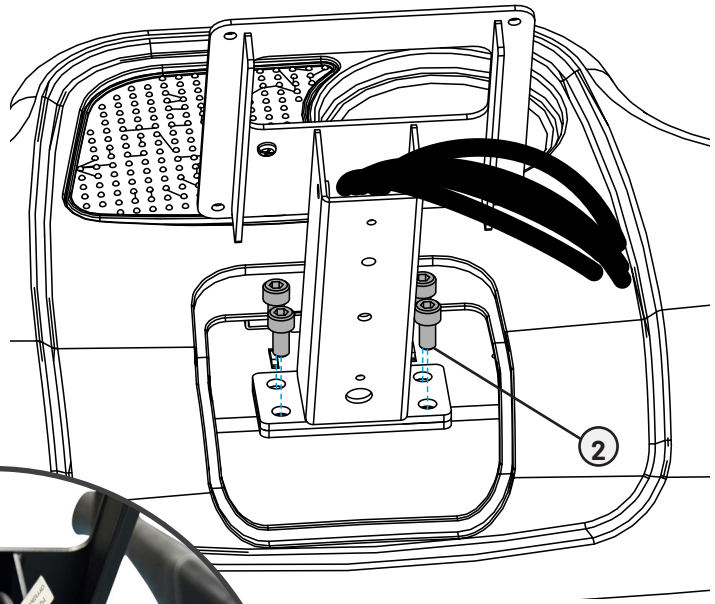

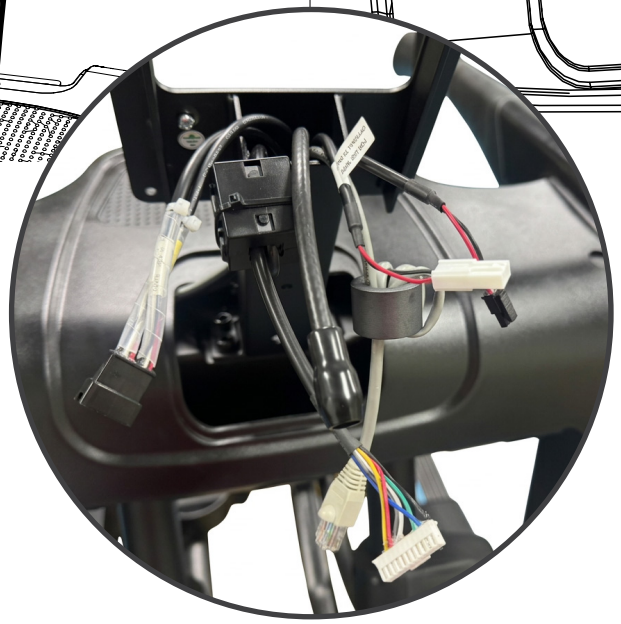

© 2026 TRUE Fitness All Rights Reserved.

Step 10—Attach Console and Rear Console Cover

Tools Used in this Step	
#2 Phillips Screwdriver	

Parts Used in this Step			
Item	**Part**	**Description**	**Qty**
1	XCS0055	ASSEMBLY, COVER, FRONT	1
2	XCS0323-35	WELDMENT, CONSOLE MAST ASSEMBLY	1
3	XCS0325BK	COVER, CONSOLE, REAR	1
4	XCS0319BK	COVER, CONSOLE, UPPER PLATE	1
5	XPS0078	TRUSS HD TAPPING SCREW, M4 X 16MM	2
6	CX0079	PHMS, M5-0.8 X 12MM, BLK, ZP	2

A. Using a #2 Phillips screwdriver, attach the console mast cover to the console mast using two screws.

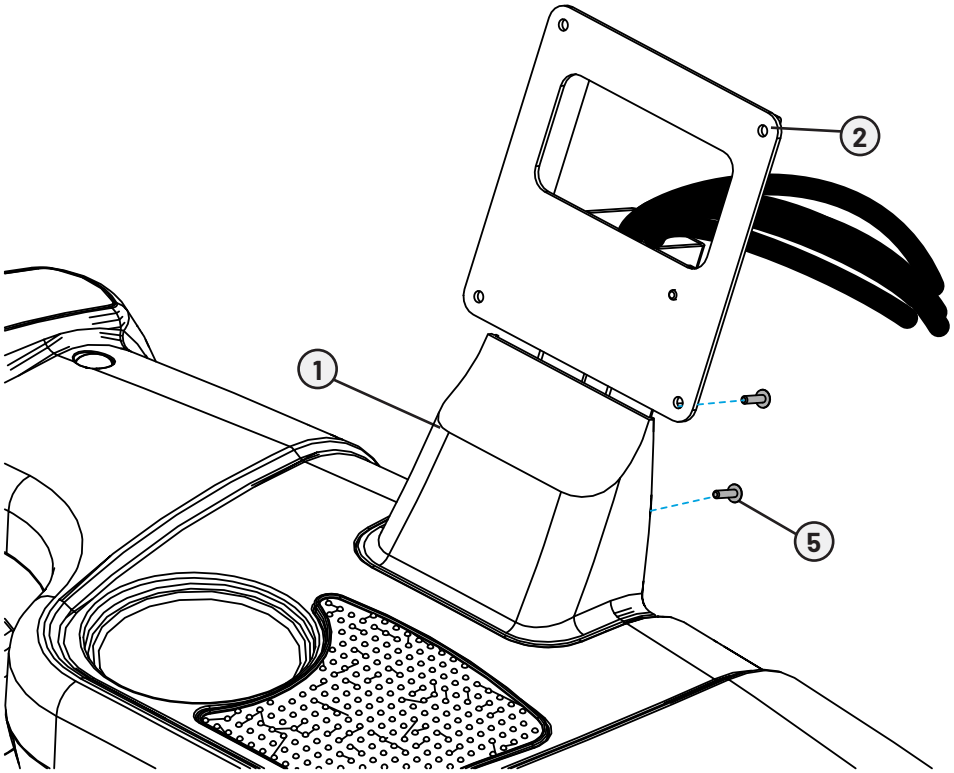

© 2026 TRUE Fitness All Rights Reserved.

Step 10—Attach Console and Rear Console Cover Continued

B. If the console has three screws (00567700) preassembled, remove and set aside these screws. They are not used in the installation. Remove and set aside the top two screws (00567800) preassembled to the console. Slightly loosen the bottom two screw but leave them installed. All four screws will be used to secure the console to the mast in step D.

C. Connect the console and base cables: network, coaxial, heart rate, I/O data, power, and ground (use the screw on the console mast to attach the ground cable from the console).

NOTE: The LED console does not use the coaxial or network cables. Those cables can be tucked back down the console mast.

Ensure all cables are routed inside the console mast to avoid pinching cables.

D. Using a #2 Phillips screwdriver, secure the console to the console mast using the four screws (00567800).

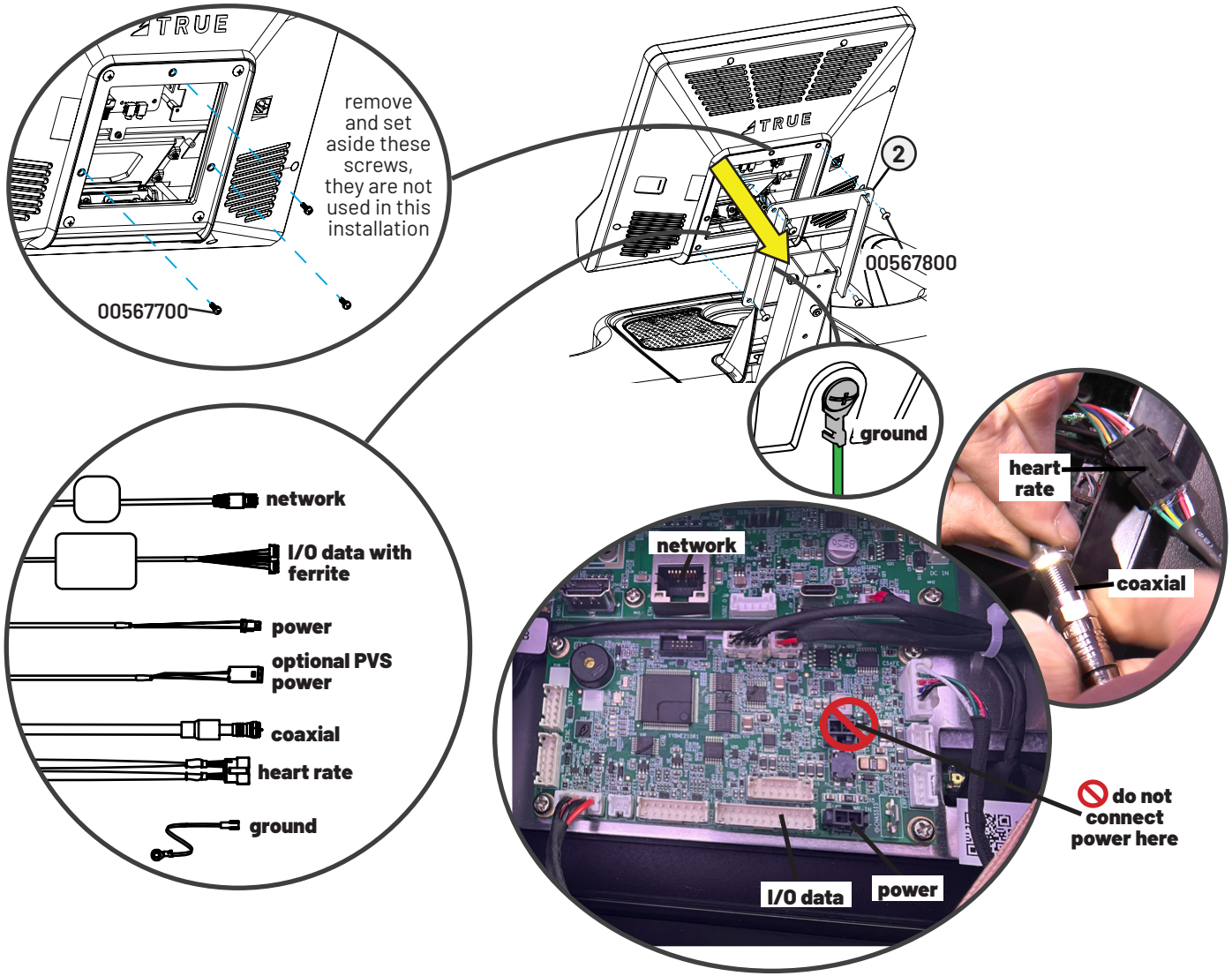

© 2026 TRUE Fitness All Rights Reserved.

Step 10—Attach Console and Rear Console Cover Continued

E. Using a #2 Phillips screwdriver, attach the rear console cover to the console mast using two screws.

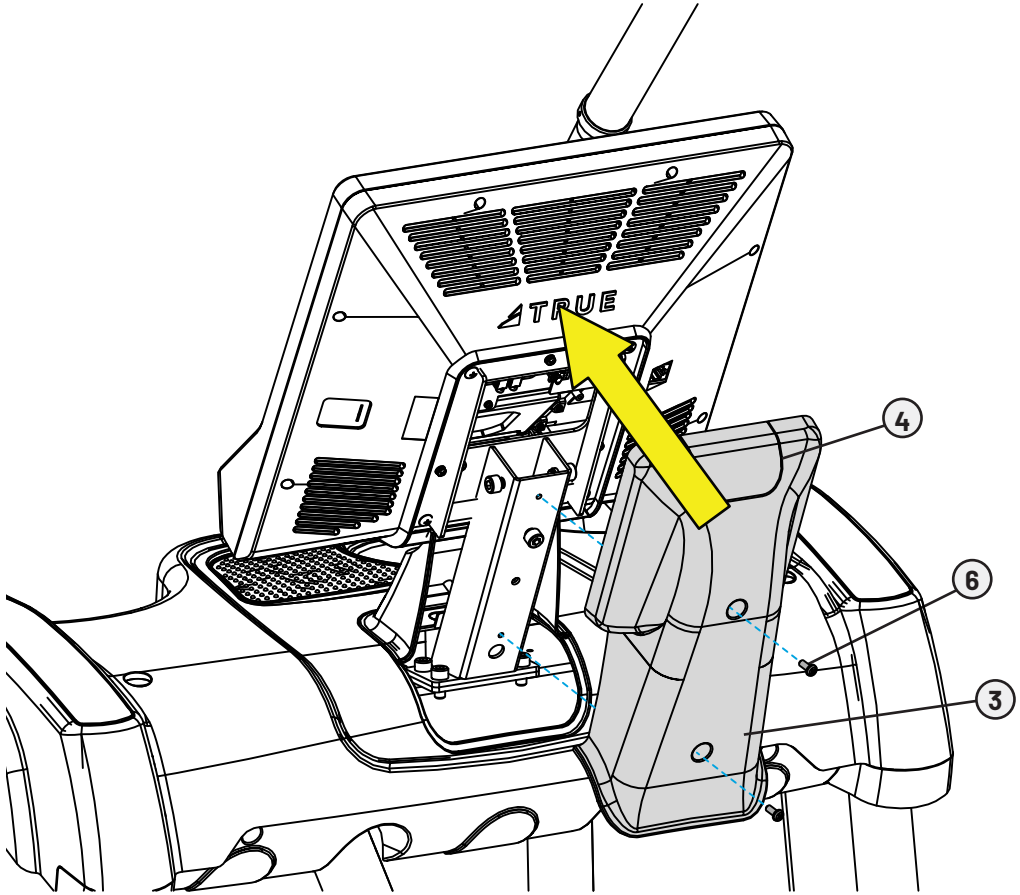

© 2026 TRUE Fitness All Rights Reserved.

Step 11—Attach Front Guard Tube

Tools Used in this Step	
5mm Allen Wrench	

Parts Used in this Step			
Item	Part	Description	Qty
1	XCS9038-35	TUBE, FRONT EXTENDED	1
2	VC90167	BHCS, M8-1.25 X 12MM, SS	4

Using a 5mm allen wrench, attach the front guard tube to the base using four hex screws.

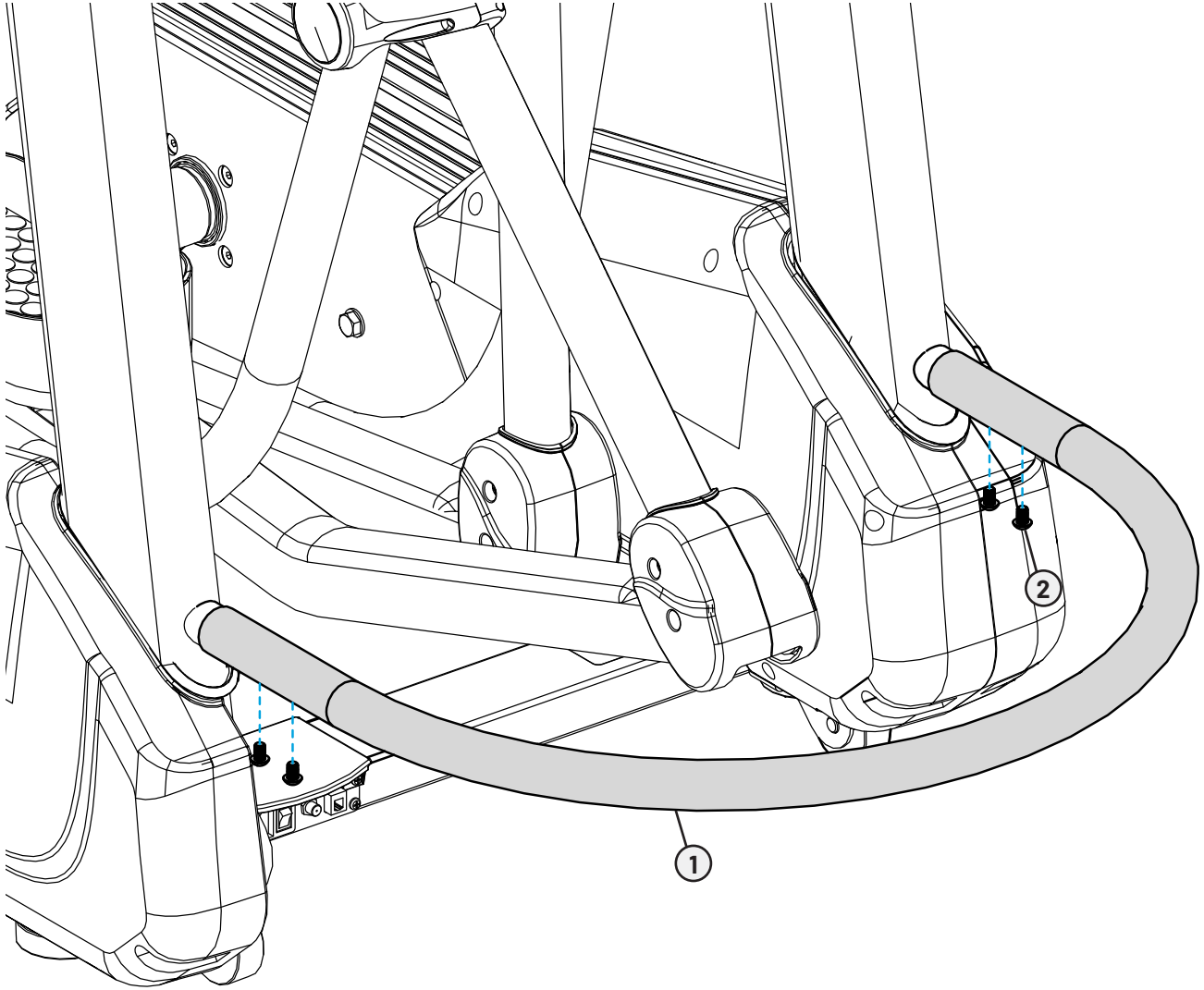

© 2026 TRUE Fitness All Rights Reserved.

Step 12-Level the Machine

Tools Used in this Step	
17mm Wrench	

A. Using a 17mm wrench, adjust all four leveling feet until they contact the floor.
IMPORTANT! Do not adjust the leveling feet to such a height that they detach or unscrew from the machine.

B. Verify all four lock nuts are securely tightened and flush against the bottom of the frame.

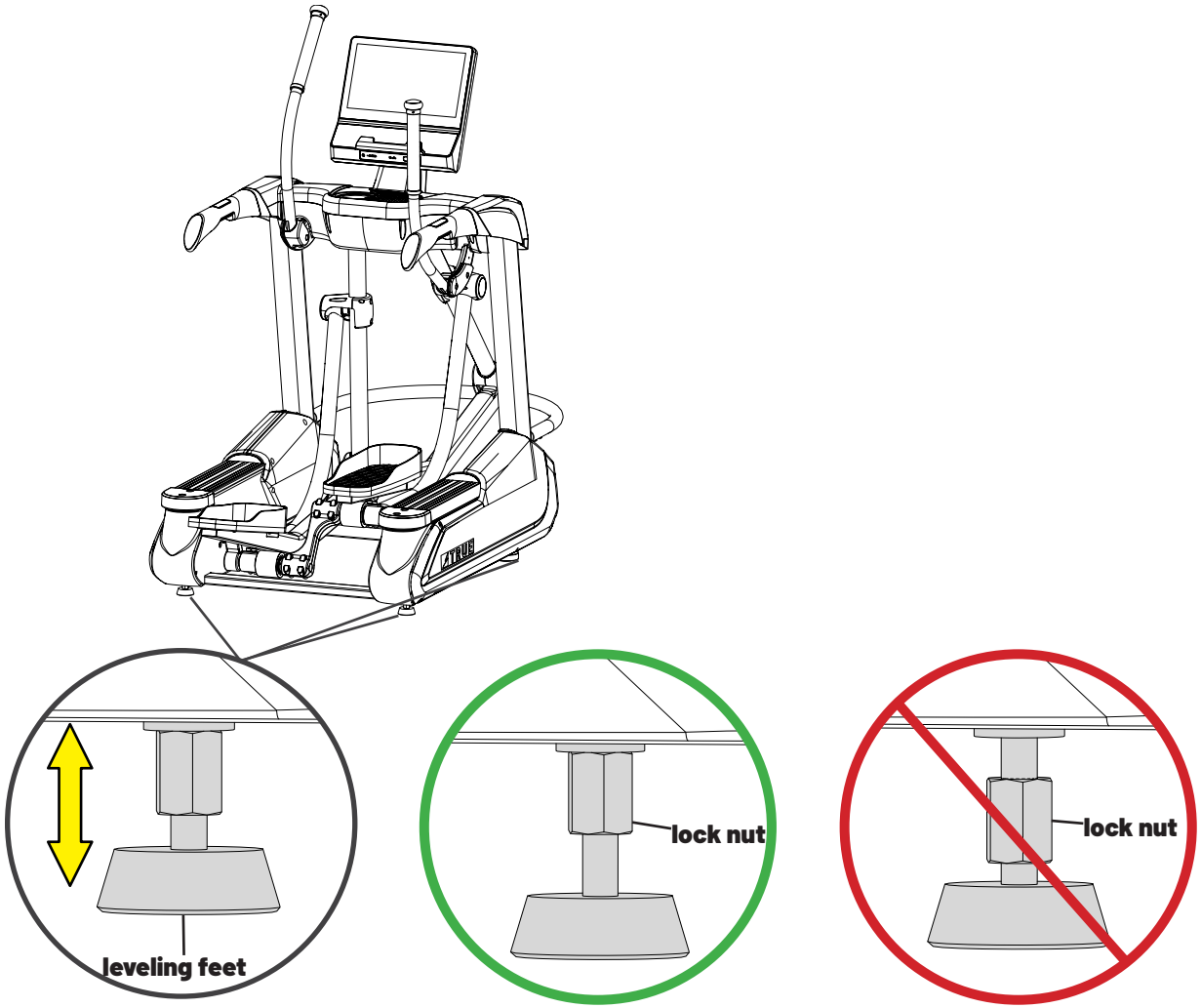

© 2026 TRUE Fitness All Rights Reserved.

Optional Step 13-Attach Power Cord

Parts Used in this Step			
Item	**Part**	**Description**	**Qty**
1	XCS9018-35	SUBASSEMBLY, POWER INLET SUPPLY	1
2	XCS0101	CABLE, POWER	1

NOTE: Power warnings, grounding instructions, and power requirements are only applicable when this product is being used with the optional power supply. Non-LED consoles require the optional power supply.

Insert the appropriate power cord into the corresponding power inlet.

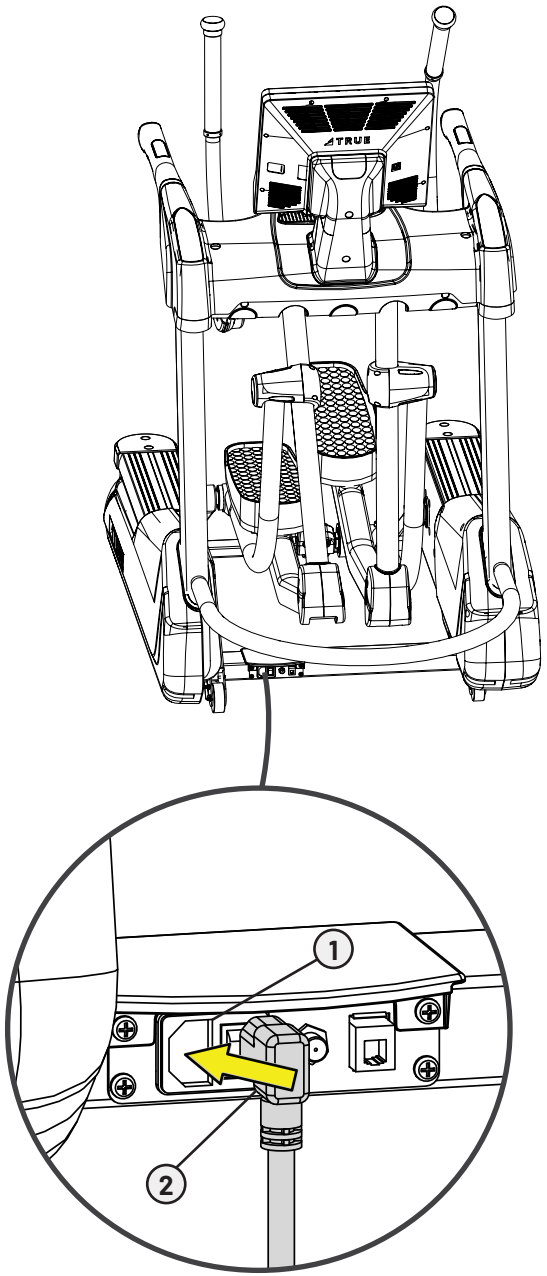

© 2026 TRUE Fitness All Rights Reserved.

IMPORTANT STEP—DO NOT SKIP!

Step 14—Configure the Console with the Base

⚠ CAUTION: AVOID DAMAGE TO THE MACHINE!
ALWAYS VERIFY THE CORRECT BASE MODEL HAS BEEN CONFIGURED TO THE CONSOLE.

THE CORRECT BASE MODEL FOR THIS MACHINE IS APEX ELLIPTICAL

Please follow the instructions included with your console for important configuration steps.

Please contact product support right away if you run into issues setting up the machine:
800.883.8783 | service@truefitness.com | Monday–Friday

© 2026 TRUE Fitness All Rights Reserved.

PRODUCT FEATURES

BASE OVERVIEW

A. Console

Allows the user to set up a workout program and control the bike during a workout.

B. Upper Exercise Arms

Moving handles on the elliptical that provide resistance to the upper body during a workout.

C. Contact Heart Rate Pads

Allows the user to check their heart rate without wearing a wireless chest strap.

D. Side Steps

The stationary steps on either side of the elliptical, which allow the user to safely straddle the footpads during startup, to isolate upper body, or in the event of an emergency.

E. Foot Pads

Moving pedals on the elliptical that provide resistance to the lower body during a workout.

F. Leveling Feet

An adjustable system used to aid in the leveling of the elliptical.

G. **Coaxial Port**

Delivers television signal to the unit.

H. Ethernet Port

Used to provide a network connection for compatible console options.

I. Power Supply Inlet

Delivers power from the wall outlet to the elliptical.

J. Battery Charge Port

A port used to charge the unit's internal battery.

NOTE: The battery charge port only applies for machines that are self-generated.

NOTE: Power warnings, grounding instructions, and power requirements are only applicable when this product is being used with the optional power supply. Non-LED consoles require the optional power supply.*

© 2026 TRUE Fitness All Rights Reserved.

BASE OVERVIEW CONTINUED

Battery Charge Port

The battery charge port is used to charge the unit's internal battery. To expose the port, use a #2 Phillips screwdriver and a plastic pry to remove the right rear shroud covers as shown below. To charge the unit's battery, plug the optional power supply (BZ80060) into the battery charge port.

NOTE: The battery charge port only applies for machines that are self-generated.

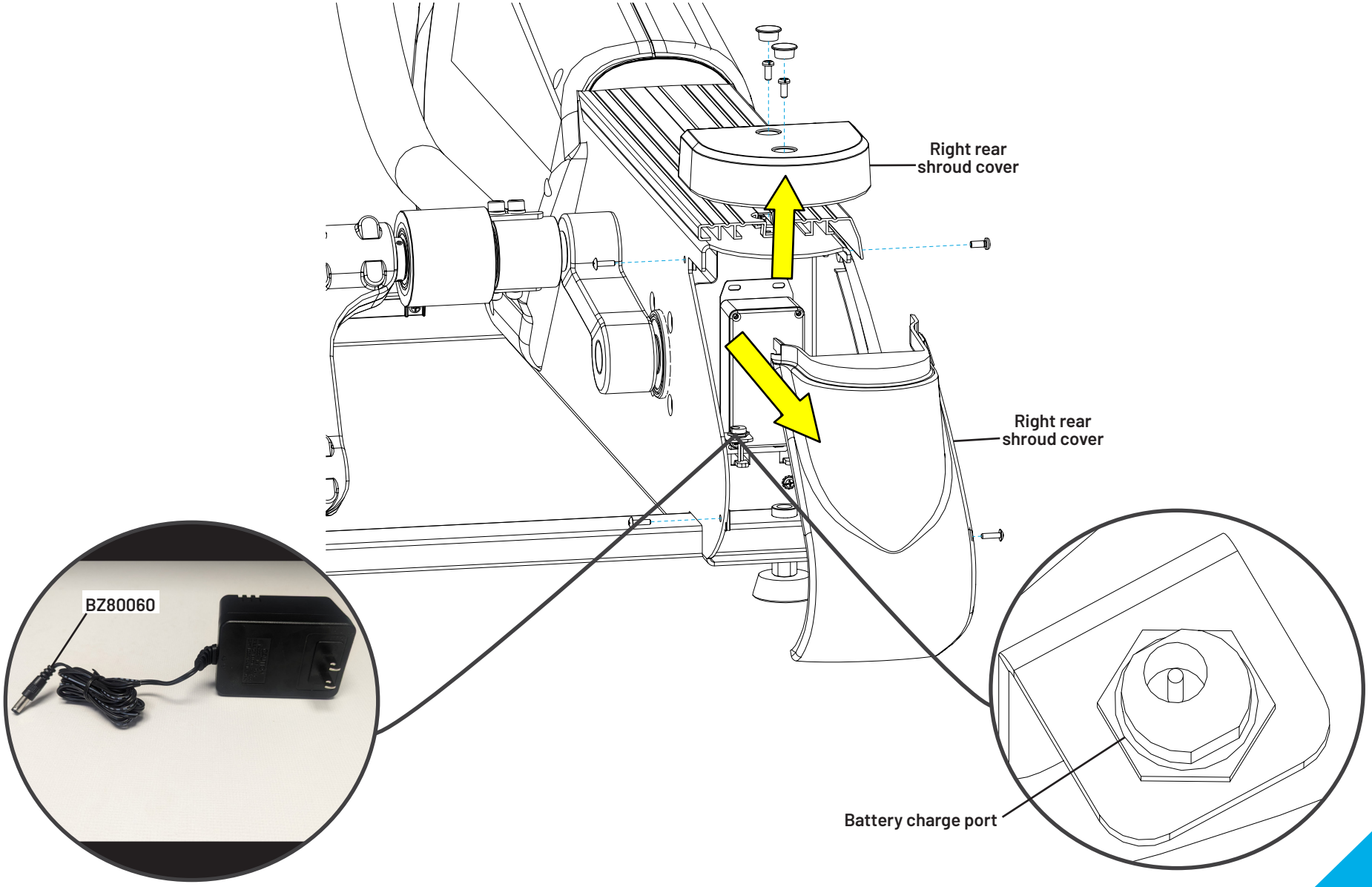

© 2026 TRUE Fitness All Rights Reserved.

CONSOLE OVERVIEW

UNITE TOUCHSCREENS (16" SHOWN)

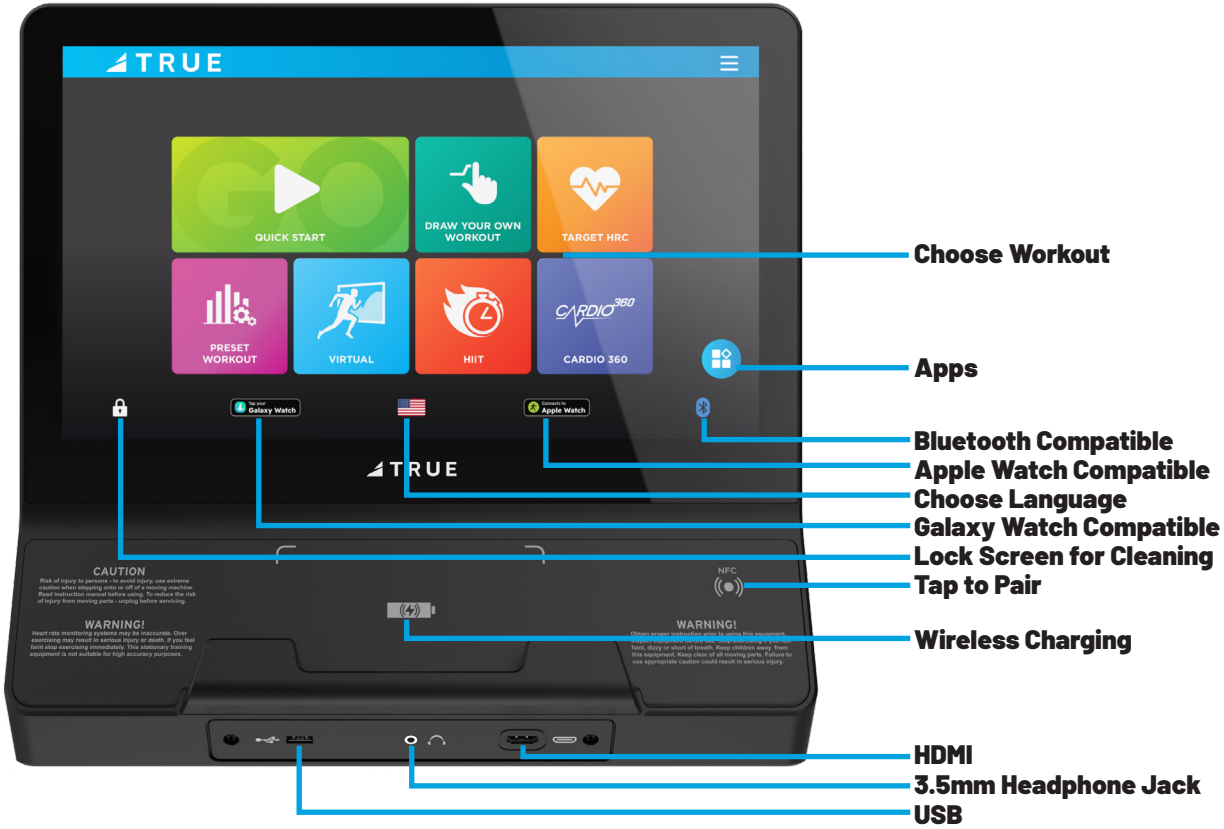

© 2026 TRUE Fitness All Rights Reserved.

UNITE LED

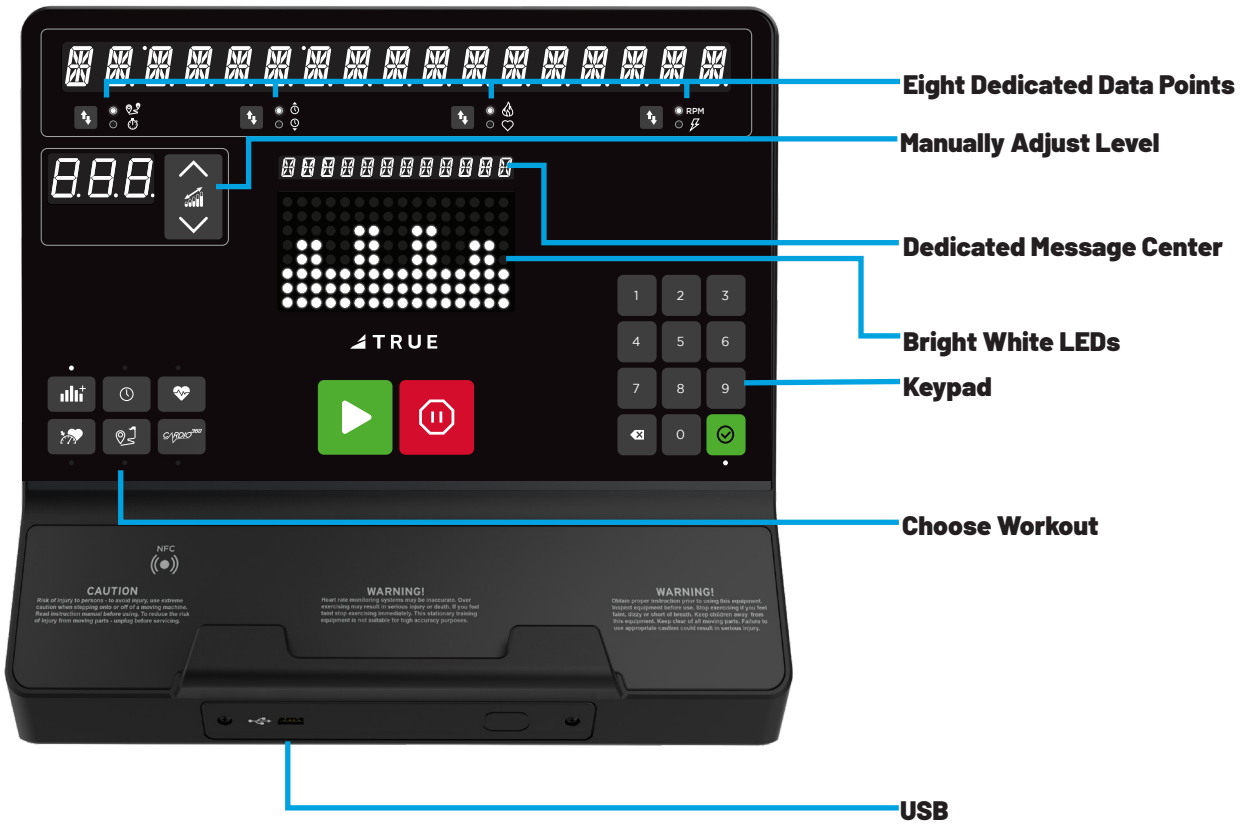

© 2026 TRUE Fitness All Rights Reserved.

CARE AND MAINTENANCE

It is important to perform the minor maintenance tasks described in this section. Failure to maintain the elliptical as described here could void the TRUE Fitness Warranty. To reduce the risk of electrical shock, always unplug the unit from its power source before cleaning or performing any maintenance tasks.

INSPECTION

TRUE is not responsible for performing or scheduling regular maintenance or inspections. Users should inspect the elliptical daily. Look and listen for slipping belts, loose fasteners, unusual noises, worn or frayed power cords, and any other indications that the equipment may be in need of service. If any of these are noticed, obtain service. Do not attempt to use the elliptical until proper service has been performed or damaged parts have been replaced.

IMPORTANT!

If you determine that the elliptical needs service, make sure that the elliptical cannot be used inadvertently. Turn the unit off, and then unplug the power cord from its power source. Make sure other users know that the elliptical needs service.

CLEANING THE EQUIPMENT

AFTER EACH USE

- Use GymWipes™ Antibacterial wipes or spray a solution of 30 parts water to 1 part mild detergent to dampen a soft cloth and wipe all exposed surfaces.
- Use a LCD/screen cleaner or spray a solution of 1 part 91% isopropyl alcohol and 1 part water to dampen a soft cloth and wipe the surface of the console. This helps remove fingerprints, dust, and dirt.

WEEKLY

- **Vacuum—**Use a vacuum to remove any dust or dirt that might have accumulated under or around the elliptical.

⚠CAUTION:

Do not use any acidic cleaners. Doing so will weaken the paint or powder coatings and may void the TRUE Warranty. Never pour water or spray liquids on any part of the bike. Allow the elliptical to dry completely before using. Frequently vacuum the floor underneath the unit to prevent the accumulation of dust and dirt, which can affect the smooth operation of the unit.

© 2026 TRUE Fitness All Rights Reserved.

LEVELING THE MACHINE

⚠CAUTION:
Prevent potential damage to the machine and injury to the user. This unit is equipped with four leveling feet. Make sure that the bike is level at all times. If the bike is placed on a uneven surface, adjusting the leveling feet can help, but may not completely compensate for extremely uneven surfaces. Bikes that are not level can cause damage to the machine and possible injuries for the user.

Once the machine has been moved to it's designated location:

A. Using a 17mm wrench, adjust all four leveling feet until they contact the floor.

   IMPORTANT! Do not adjust the leveling feet to such a height that they detach or unscrew from the machine.

B. Verify all four lock nuts are securely tightened and flush against the bottom of the frame.

Tools Used in this Step	
17mm Wrench	

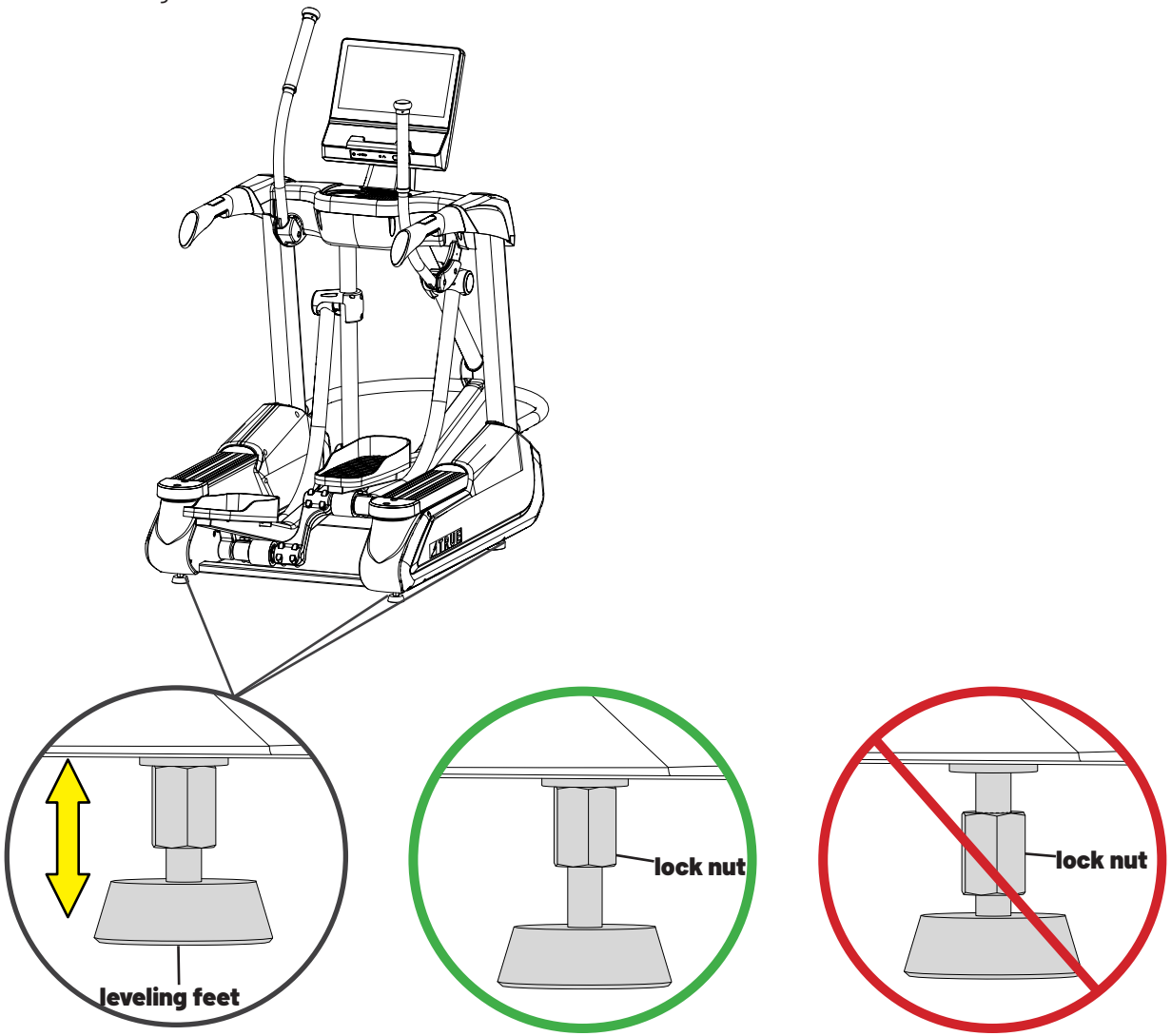

© 2026 TRUE Fitness All Rights Reserved.

PREVENTATIVE MAINTENANCE

TRUE recommends that quarterly scheduled maintenance be performed by a qualified service technician. Please contact your dealer or visit www.truefitness.com to contact a local TRUE authorized service technician.

IMPORTANT! Use only TRUE Fitness certified service providers. Using non-authorized service providers could void the TRUE Warranty.

Frequency	Tasks
Daily	• Look and listen for loose fasteners, unusual noises, worn or frayed cables, and any other indications that the equipment may be in need of service. • Use GymWipes™ Antibacterial wipes or spray a solution of 30 parts water to 1 part mild detergent to dampen a soft cloth and wipe all exposed surfaces. • Use a LCD/screen cleaner or spray a solution of 1 part 91% isopropyl alcohol and 1 part water to dampen a soft cloth and wipe the surface of the console. This helps remove fingerprints, dust, and dirt.
Weekly	• Vacuum any dust or dirt that might have accumulated under or around the elliptical.
Quarterly	• Record time, distance, and hours from the console. • Check error log in console. • Remove shroud covers and vacuum any debris out of the speed sensor, control electronics and moving parts. • Move and vacuum underneath the machine. • Inspect all fasteners. • Inspect all electrical connections. • Inspect components for abnormal or premature wear.

LONG TERM STORAGE

When the elliptical is not in use for any length of time, turn it off. Make sure that the power cord is unplugged from the power source and is positioned so that it will not become damaged or interfere with people or other equipment.

CLEANING AND STORING THE CHEST STRAP

Clean the chest strap using a sponge or soft cloth dampened in mild soap and water. Dry the surface thoroughly with a clean towel. Store the chest strap in a place where it remains free of dust and dirt. Be sure to protect the chest strap from extreme temperatures. Do not store it in a place that may be exposed to temperatures below 32° F (0° C).

© 2026 TRUE Fitness All Rights Reserved.

ADDITIONAL INFORMATION

TROUBLESHOOTING

This troubleshooting information is intended to assist in diagnostics only and is not all inclusive. Technical specifications, error codes, and programming are subject to change without notice. TRUE accepts no liability for any damage or loss suffered by persons whom rely wholly or in part on any description or statement contained within this manual. Please visit www.truefitness.com to obtain the most recent version of all manuals and contact TRUE product support (800-883-8783) for assistance with troubleshooting and diagnostics.

Malfunction	Possible Cause	Corrective Action
No Power	Unit turned off	Verify the On/Off switch is at the ON position
	Damaged power cord	Replace power cord
	Power cord not fully seated in socket	Inspect power connection at the unit and outlet
	No power at outlet	Using a voltmeter verify power at outlet
	Tripped circuit breaker	The location of the circuit breaker is next to the On/Off switch. Verify the circuit breaker is not open. If the breaker is open reset.
Unit resets or pauses randomly	Damaged power cord	Replace power cord
	Power cord not fully seated in socket	Inspect power connection at the unit and outlet
	Safety e-stop key not fully engaged	Re-engage the safety/e-stop key to the console
	Nucleus board may be damaged	Contact TRUE product support
	Insufficient power	Verify output voltage from 20A outlet with a voltmeter
	Error code is displayed on console	Contact TRUE product support
	Pinched or loose main communication cable	
	No User Present displayed on screen	User weight must be over 90lbs. Verify No User Present settings in console.

© 2026 TRUE Fitness All Rights Reserved.

Malfunction	Possible Cause	Corrective Action
Heart rate is displaying erratically or not displaying	Transmitter belt contacts are not making good contact with the skin	Re-adjust the transmitter belt so that it is in full contact with the skin
	Contacts on the transmitter belt are not moist	Moisten the contacts on the transmitter belt
	Transmitter belt is not within 3 feet (1 meter) of the heart rate receiver	Adjust your position on the belt so that you are within 3 feet (1 meter) of the console
	The battery inside the transmitter belt is depleted	Replace the transmitter belt with a compatible transmitter belt
	Another user wearing a compatible transmitter strap is within 3 foot (1 meter) of the unit	Move the units so that there is more space in-between units
	Environmental interference from high voltage power lines	Move the unit to another position within the room or move the cause of the interference until heart rate reading are stable. If the probable source of interference is plugged into the same outlet move the suspect source to another outlet.
	Environmental interference from computers	
	Environmental interference from motor driven appliances	
	Environmental interference from cell or cordless phone	
	Environmental interference from Wi-Fi router	
Contact Heart Rate not displaying	Machine needs to be restarted	Power cycle
	Cables are pinched or damaged	Contact TRUE product support
	Nucleus board may be damaged	Contact TRUE product support
	Heart Rate Grips may be damaged	Contact TRUE product support

© 2026 TRUE Fitness All Rights Reserved.

WIRING DIAGRAM SELF GENERATING POWER

Self Generating

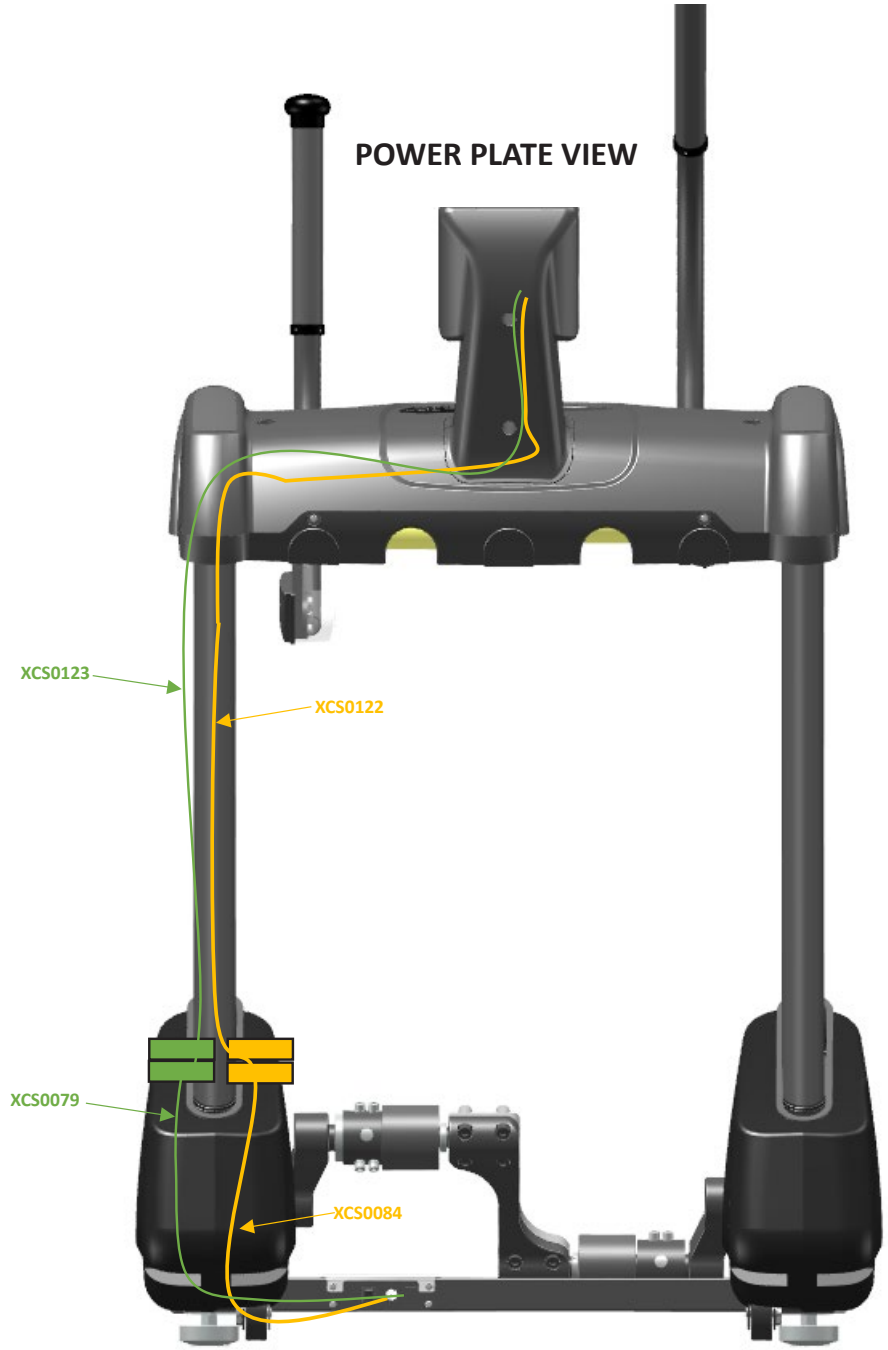

© 2026 TRUE Fitness All Rights Reserved.

WIRING DIAGRAM SELF GENERATING POWER

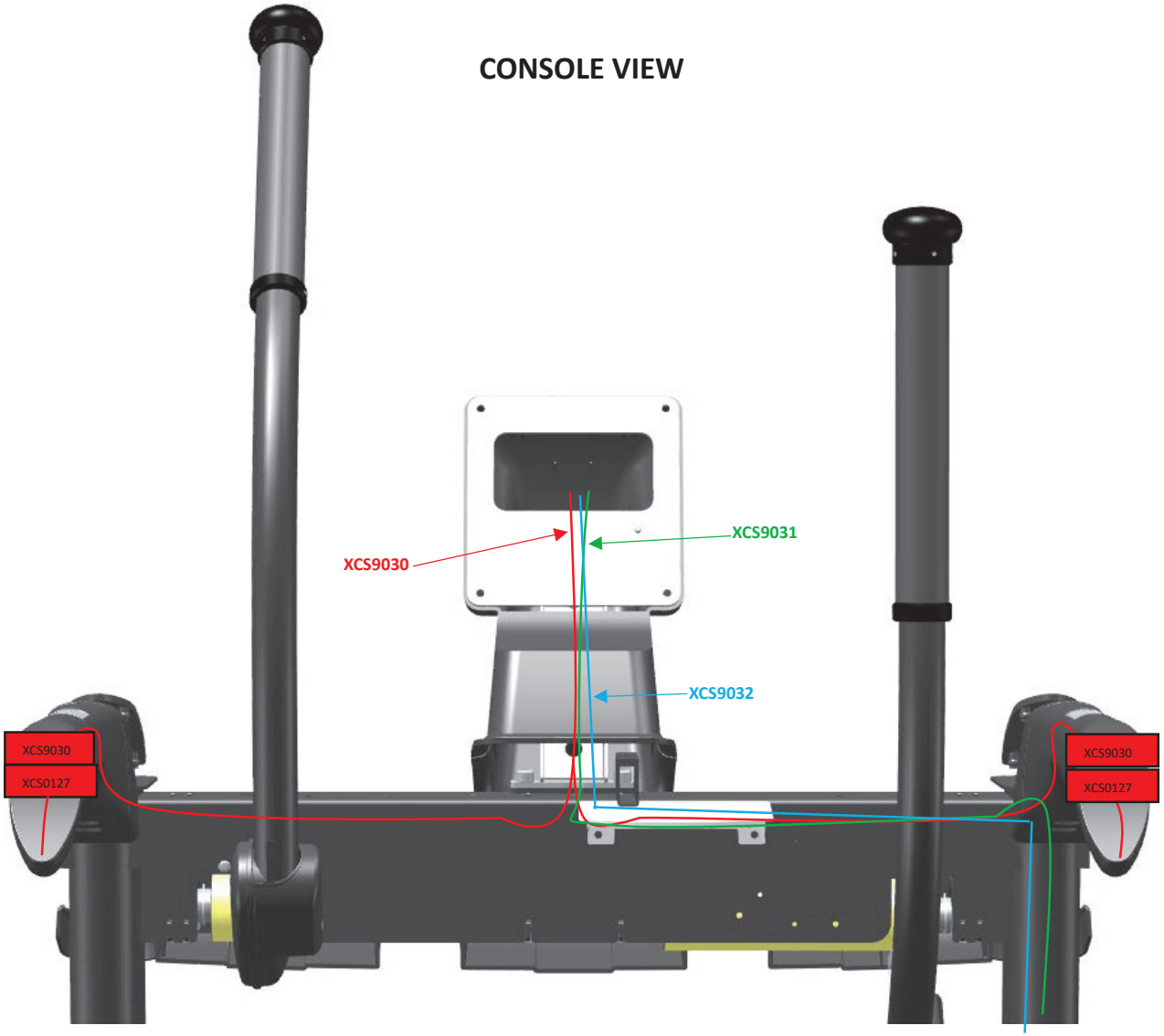

© 2026 TRUE Fitness All Rights Reserved.

WIRING DIAGRAM SELF GENERATING POWER

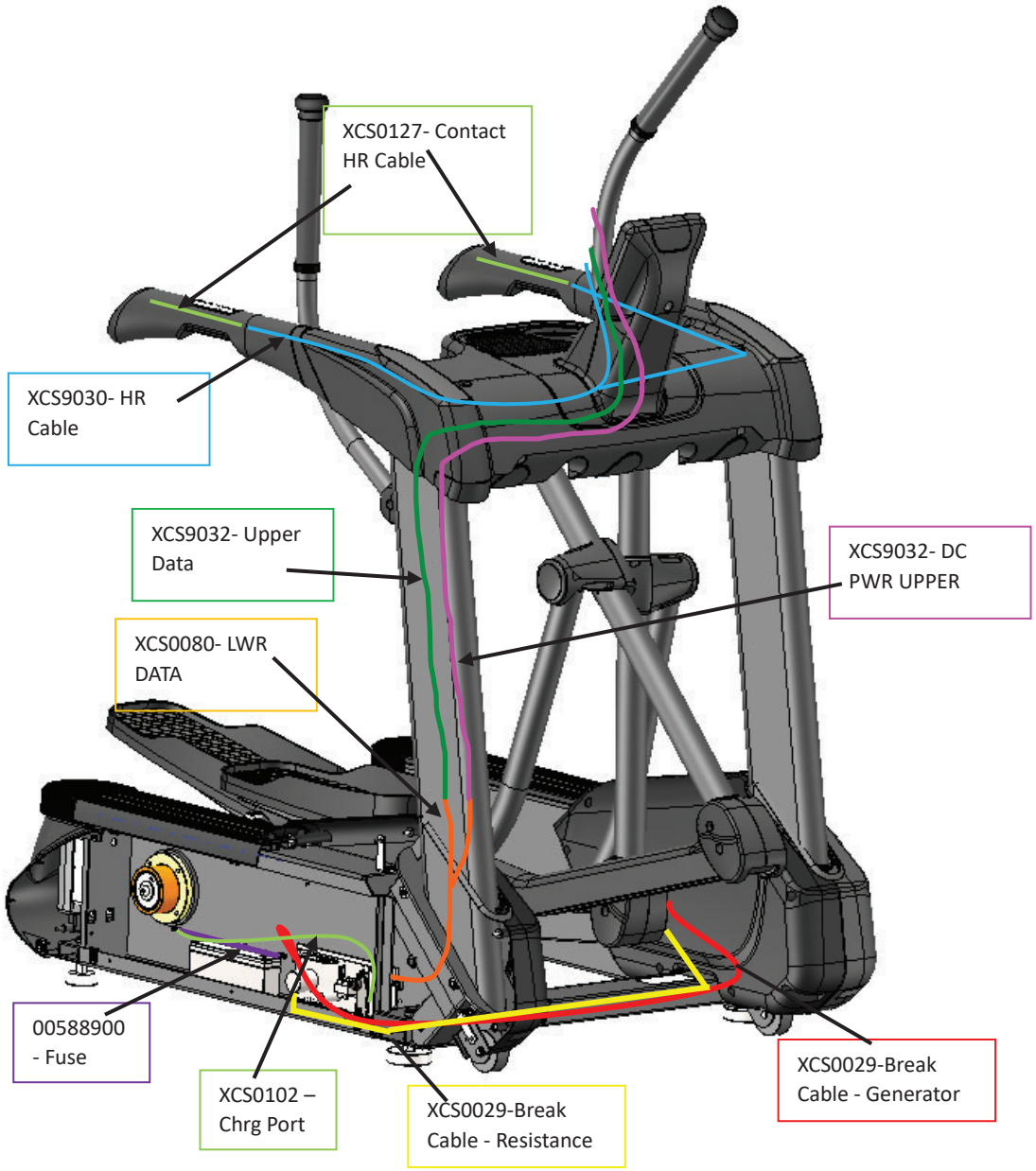

© 2026 TRUE Fitness All Rights Reserved.

WIRING DIAGRAM OPTIONAL POWER SUPPLY

W/Optional
Power Supply

POWER PLATE VIEW

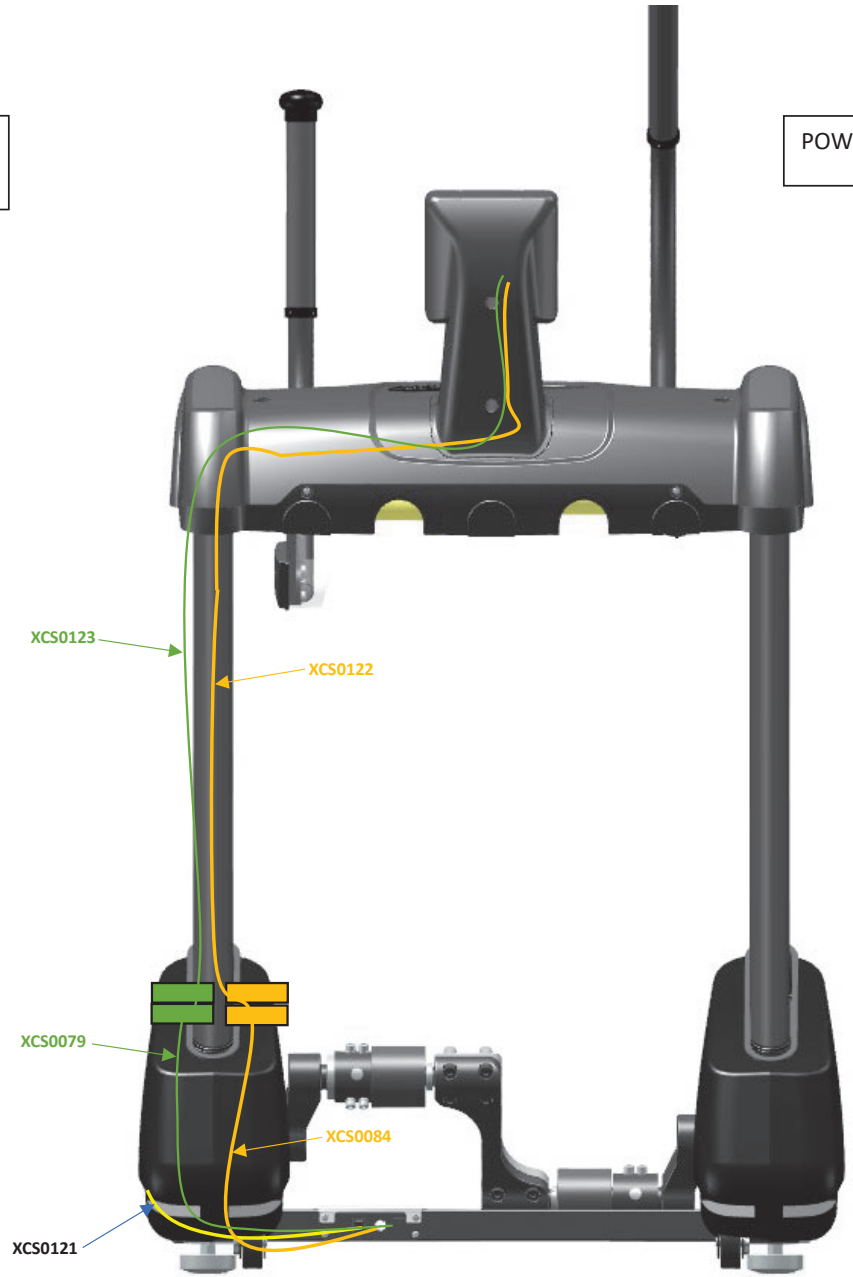

© 2026 TRUE Fitness All Rights Reserved.

WIRING DIAGRAM OPTIONAL POWER SUPPLY

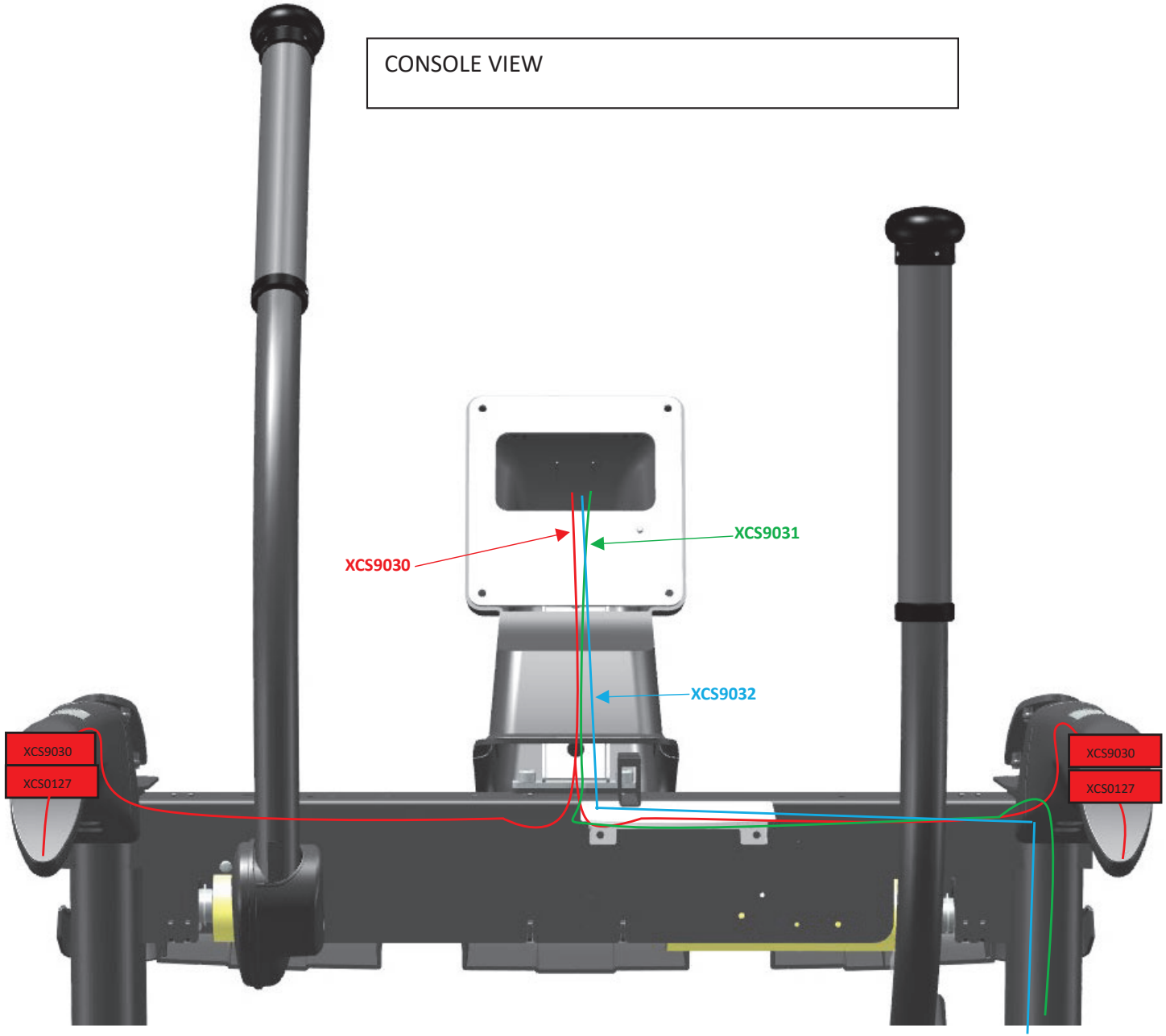

© 2026 TRUE Fitness All Rights Reserved.

WIRING DIAGRAM OPTIONAL POWER SUPPLY

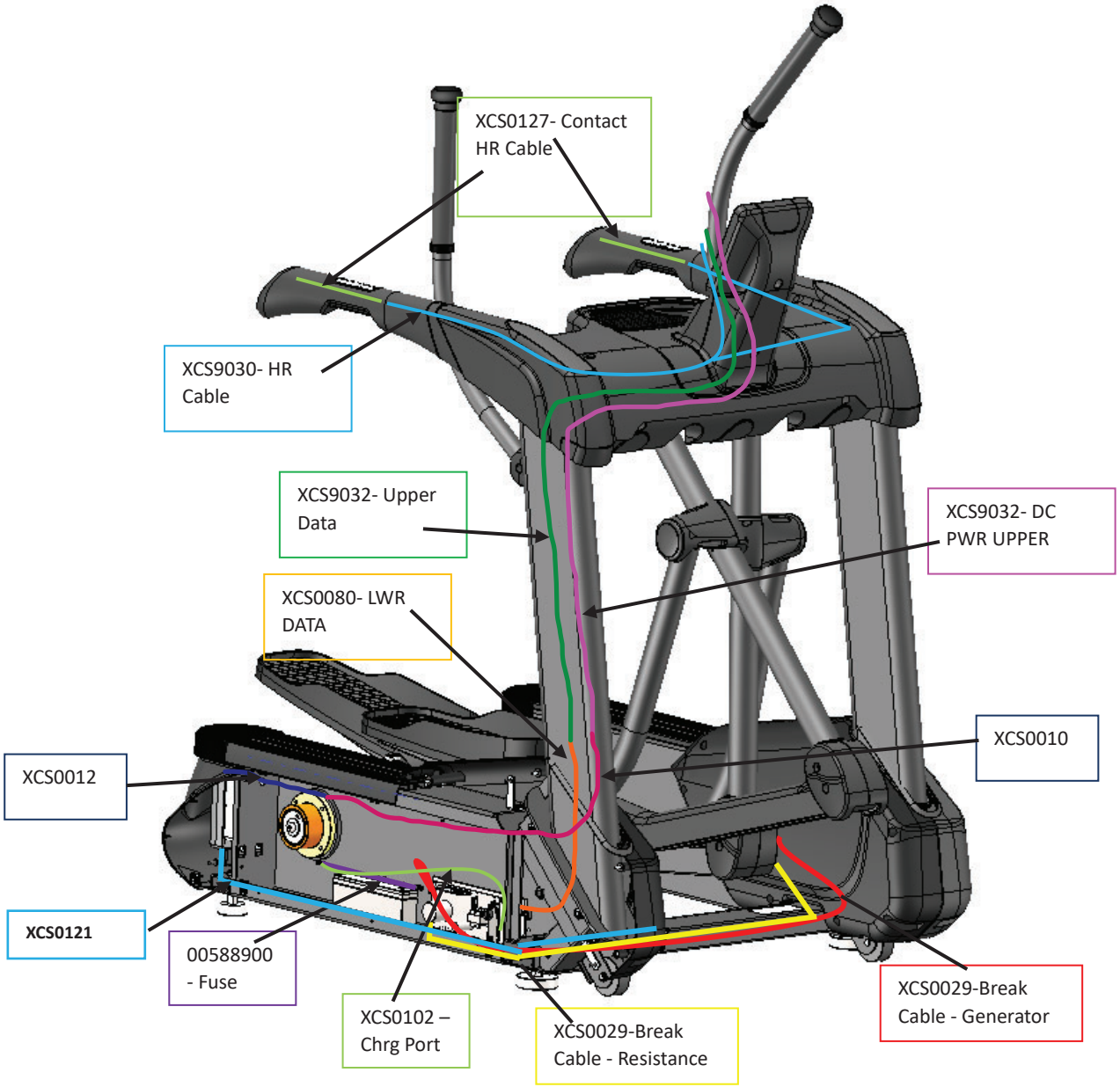

© 2026 TRUE Fitness All Rights Reserved.

WARRANTY INFORMATION

ATTENTION OWNER'S: **To ensure you get the most out of your purchase and receive the full benefits of our warranty, you must register your product within 45 days of purchaser's receipt of this product.**

COMMERCIAL WARRANTY

CARDIO				
WARRANTY ITEM	**VAPOR, APEX**	**GRAVITY PLUS**	**GRAVITY**	**ADX, RO, SURGE**
Frame*	10 Years (with registration)	10 Years (with registration)	10 Years (with registration)	5 Years (with registration)
Parts	3 Years	3 Years	3 Years	3 Years
Consoles	3 Years	3 Years	3 Years	2 Years
Labor**	2 Years (with registration)	2 Years (with registration)	1 Year (with registration)	1 Year (with registration)
Wear Items***	180 Days	180 Days	180 Days	90 Days

STRENGTH	
WARRANTY ITEM	**PALLADIUM, FUSE XL, FORCE, FITNESS LINE, ATLAS, XFT, XFW, MP, SM, FT, FS**
Frame*	10 Years (with registration)
Parts	5 Years
Cables and Linear Bearings	1 Year
Labor**	1 Year (with registration)
Wear Items***	90 Days (6 Months for FORCE only)

FLEXIBILITY	
WARRANTY ITEM	**STRETCH**
Parts	1 Year
Wear Items***	90 Days

Warranty does not cover damage or equipment failure resulting from or caused by improper assembly/installation, accident, misuse, abuse, unauthorized modification, or failure to provide reasonable and necessary maintenance.

*Frame is the serialized base of the unit and does not include paint or coatings. Frame warranty will equal that of parts warranty unless, within 45 days of purchaser's receipt of this Product (A) the warranty is registered on-line or (B) if the form provided with equipment is filled in, signed by the original purchaser, and mailed to TRUE.

**Labor warranty is available for equipment located within United States. TRUE Fitness equipment is automatically covered under a 6-month Limited Labor Warranty. This 6-month Limited Labor Warranty begins from the date of purchase shown by a valid receipt. If a valid receipt is not available, the 6-month Limited Labor Warranty period begins from the date of manufacture on the originally purchased equipment.

***Wear Items include: batteries, covers, caps, badges, paint, pedal straps, toe clips, elliptical pedal inserts, foot pads, Coax/TV, HDMI, USB, mirroring or Ethernet connections, and safety key.

See Warranty Details for product registration requirements, terms, conditions, and complete coverage details.

© 2026 TRUE Fitness All Rights Reserved.

ATTENTION OWNER'S: **To ensure you get the most out of your purchase and receive the full benefits of our warranty, you must register your product within 45 days of purchaser's receipt of this product.**

LIMITED-USE COMMERCIAL WARRANTY*

CARDIO				
WARRANTY ITEM	**VAPOR, APEX**	**GRAVITY PLUS**	**GRAVITY**	**LAUNCH**
Frame**	10 Years (with registration)	10 Years (with registration)	10 Years (with registration)	10 Years (with registration)
Parts	5 Years	5 Years	5 Years	5 Years
Consoles	3 Years	3 Years	3 Years	3 Years
Tread Belt and Deck	5 Years	5 Years	5 Years	2 Years
Labor***	3 Years (with registration)	3 Years (with registration)	2 Years (with registration)	1 Year (with registration)
Wear Items****	180 Days	180 Days	180 Days	90 Days

TRUE Fitness may offer alternative warranties to purchasers of commercial equipment for limited-use commercial.* This policy ensures that customers who use commercial equipment for limited-use commercial use may receive alternative warranty coverage, provided they meet the specified requirements. It's important to note that the specific terms and conditions of the alternative warranty, as well as the eligibility criteria, may vary depending on the product and TRUE's policies at the time of purchase. Customers should review the warranty terms and contact TRUE for precise details.

*To be eligible for the alternative limited-use commercial warranty, equipment use cannot exceed 6-hours use a day or be for use in a membership, dues paying, or institutional facility.

Customers must provide TRUE with the following within 45 days of installation of the qualifying commercial-rated equipment:

- Purchase agreement.
- Proof of professional delivery and installation.
- TRUE will recognize the alternative warranty for the purchaser and implement it within 45 days of receiving the required documentation if such an alternative warranty is available for the specific product.

Warranty does not cover damage or equipment failure resulting from or caused by improper assembly/installation, accident, misuse, abuse, unauthorized modification, or failure to provide reasonable and necessary maintenance.

****Frame is the serialized base of the unit and does not include paint or coatings. Frame warranty will equal that of parts warranty unless, within 45 days of purchaser's receipt of this Product (A) the warranty is registered on-line or (B) if the form provided with equipment is filled in, signed by the original purchaser, and mailed to TRUE.**

*****Labor warranty is available for equipment located within United States. TRUE Fitness equipment is automatically covered under a 6-month Limited Labor Warranty. This 6-month Limited Labor Warranty begins from the date of purchase shown by a valid receipt. If a valid receipt is not available, the 6-month Limited Labor Warranty period begins from the date of manufacture on the originally purchased equipment.**

******Wear Items include: batteries, covers, caps, badges, paint, pedal straps, toe clips, elliptical pedal inserts, foot pads, Coax/TV, HDMI, USB, mirroring or Ethernet connections, and safety key.**

See Warranty Details for product registration requirements, terms, conditions, and complete coverage details.

© 2026 TRUE Fitness All Rights Reserved.

ATTENTION OWNER'S: **To ensure you get the most out of your purchase and receive the full benefits of our warranty, you must register your product within 45 days of purchaser's receipt of this product.**

IN-HOME USE WARRANTY*

CARDIO				
WARRANTY ITEM	**VAPOR, APEX**	**GRAVITY PLUS**	**GRAVITY**	**LAUNCH**
Frame**	25 Years (with registration)	25 Years (with registration)	25 Years (with registration)	25 Years (with registration)
Drive Motor***	25 Years (with registration)	25 Years (with registration)	25 Years (with registration)	25 Years (with registration)
Parts	10 Years	12 Years	10 Years	7 Years
Consoles	3 Years	3 Years	3 Years	3 Years
Tread Belt and Deck	10 Years	10 Years	7 Years	5 Years
Labor****	2 Years (with registration)	2 Years (with registration)	2 Years (with registration)	1 Year (with registration)
Wear Items*****	180 Days	180 Days	180 Days	180 Days

TRUE Fitness may offer alternative warranties to purchasers of commercial equipment for in-home use.* This policy ensures that customers who use commercial equipment for in-home use may receive alternative warranty coverage, provided they meet the specified requirements. It's important to note that the specific terms and conditions of the alternative warranty, as well as the eligibility criteria, may vary depending on the product and TRUE's policies at the time of purchase. Customers should review the warranty terms and contact TRUE for precise details.

*To be eligible for the alternative in-home use warranty, equipment must be used at a home address and cannot be used outside of the purchaser of the equipment and their immediate family.

Customers must provide TRUE with the following within 45 days of installation of the qualifying commercial-rated equipment:

- Purchase agreement.
- Proof of professional delivery and installation.
- TRUE will recognize the alternative warranty for the purchaser and implement it within 45 days of receiving the required documentation if such an alternative warranty is available for the specific product.

Warranty does not cover damage or equipment failure resulting from or caused by improper assembly/installation, accident, misuse, abuse, unauthorized modification, or failure to provide reasonable and necessary maintenance.

****Frame is the serialized base of the unit and does not include paint or coatings. Frame warranty will equal that of parts warranty unless, within 45 days of purchaser's receipt of this Product (A) the warranty is registered on-line or (B) if the form provided with equipment is filled in, signed by the original purchaser, and mailed to TRUE.**

*****Drive Motor warranty will equal that of parts warranty unless, within 45 days of purchaser's receipt of this Product (A) the warranty is registered on-line or (B) if the form provided with equipment is filled in, signed by the original purchaser, and mailed to TRUE.**

******Labor warranty is available for equipment located within United States. TRUE Fitness equipment is automatically covered under a 6-month Limited Labor Warranty. This 6-month Limited Labor Warranty begins from the date of purchase shown by a valid receipt. If a valid receipt is not available, the 6-month Limited Labor Warranty period begins from the date of manufacture on the originally purchased equipment.**

*******Wear Items include: batteries, covers, caps, badges, paint, pedal straps, toe clips, elliptical pedal inserts, foot pads, Coax/TV, HDMI, USB, mirroring or Ethernet connections, and safety key.**

See Warranty Details for product registration requirements, terms, conditions, and complete coverage details.

© 2026 TRUE Fitness All Rights Reserved.

ATTENTION OWNER'S: **To ensure you get the most out of your purchase and receive the full benefits of our warranty, you must register your product within 45 days of purchaser's receipt of this product.**

WARRANTY DETAILS

All TRUE Fitness products are distributed by TRUE and are warranted to the original product purchaser and the parts of the TRUE product (the "Product") listed below. During the applicable Warranty Period, the Product, under normal use and service, shall be free of manufacturing defects in workmanship and materials.

NOTE:

- Standard shipping is included with warranty part replacement.
- Shipping for warranty frame or replacement is included for the period of three years from the original date of purchase.

All Warranty Items are "LIMITED"

- This limited warranty does not cover damage or equipment failure resulting from or caused by improper assembly/installation, failure to follow instructions and warnings in owner's manual, accident, misuse, abuse, unauthorized modification, failure to provide reasonable and necessary maintenance, software version upgrades, compatibility with third party/aftermarket hardware, software, applications, or websites.
- TRUE's liability shall under no circumstances exceed the actual amount paid by you for the product, nor shall TRUE under any circumstances be liable for any consequential, incidental, special or punitive damages or losses, whether direct or indirect.
- Some states or countries do not allow the exclusion or limitation of incidental or consequential damages, so the above limitation or exclusion may not apply to you.
- TRUE will neither assume nor authorize any person to assure for us any other obligation or liability concerning the sale of this Product. Under no circumstances shall TRUE be liable under this warranty, or otherwise, of any damage to any person or property, including any lost profits or lost savings, for any special, indirect, secondary, incidental, or consequential damages arising out of the use of or inability to use this Product.
- This limited warranty, which is given expressly and in lieu of all other express warranties, constitutes the only warranty made by TRUE.
- The remedies described herein are your sole and exclusive remedies and TRUE's entire liability for any breach of this limited warranty.
- No one is authorized to change, modify, or extend the terms of this limited warranty.
- This limited warranty is in lieu of all other warranties of any kind either expressed or including but not limited to implied warranties of merchant.
- This limited warranty applies to the product only while the product remains in the possession of the original purchaser and is not transferable.
- This limited warranty becomes VALID ONLY if the Product is initially assembled/installed by a TRUE authorized dealer/technician (if anyone other than a TRUE authorized dealer/technician initially assembles and installs the Product, this limited warranty will be void unless the written authorization of TRUE is first obtained).
- The "Warranty Period" for this limited warranty shall be for the duration forth in the applicable charts, beginning from the date of original purchase; provided, however, except to the extent prohibited by applicable law, the "Warranty Period" shall only be six months for labor (from the date of original purchase) unless, within 45 days of purchaser's receipt of this Product (A) the warranty is registered on-line or (B) if the form provided with equipment is filled in, signed by the original purchaser, and mailed to TRUE.
- All serial numbers must be intact on the Product for this limited warranty to be valid.
- Installation or download of any 3rd party or after-market products will result in voided warranty. This includes, but is not limited to, electrical and mechanical parts, software, or applications.
- TRUE will ship to an authorized service provider any new or rebuilt replacement part or component, or at our option, replace or refund the Product.
- Replacement parts are warranted for the remaining portion of the original warranty period.
- Proof/receipts of necessary maintenance may be required within 30 days of requested warranty part or service.
- This limited warranty does not apply to the performance of the heart rate accuracy will not be warranted as performance varies, based on user's physiology, age, method of use, and other external factors.

© 2026 TRUE Fitness All Rights Reserved.

ATTENTION OWNER'S: **To ensure you get the most out of your purchase and receive the full benefits of our warranty, you must register your product within 45 days of purchaser's receipt of this product.**

WARRANTY REGISTRATION

Thank you for purchasing a TRUE product!

To ensure you get the most out of your purchase and receive the full benefits of our warranty, **you must register your product within 45 days of purchaser's receipt of this product**.

How to register your product:

- **Online:**
  Simply visit our website at truefitness.com and register your product warranty in one simple step.
- **QR Code:**
  Scan the QR code below with your smartphone to be taken directly to the registration page.
- **By Mail:**
  Complete the information below and mail to:
  TRUE Product Support
  1 Glazer Way
  St. Charles, MO 63301

PLEASE RETAIN THIS PORTION FOR YOUR RECORDS
BASE SERIAL NUMBER:
CONSOLE SERIAL NUMBER:

WARRANTY REGISTRATION

Base Serial Number

Console Serial Number

Purchase Date

Company (if applicable)

Customer Name (First and Last)

Email Address

Phone Number

Street Address

City

State

Postal Code

Country

© 2026 TRUE Fitness All Rights Reserved.

TRUE FITNESS

CONTACT US
service@truefitness.com
800.883.8783

Office: 1 Glazer Way, St. Charles, MO 63301
Shipping: 3831 Mueller Rd, St. Charles, MO 63301

TRUEFITNESS.COM

MAN-XC1-0A-35 Owner's Manual and Assembly Guide REV09

© 2026 TRUE Fitness All Rights Reserved.